Daimler

SPARES DIVISION

SPARE PARTS CATALOGUE

for

DAIMLER MAJESTIC

Price

£1 . 15s . 0d.

UBLICATION NO. D.2

ISSUED SEPTEMBER, 1962

CHASSIS 98994
ENGINE 90526

ajestic + 104
nlet Valves
olden 308 can be
tted + used.
Bedford. Truck Trans.

Reg ends Alternator
Austin Diesel 2.2 litre
Perkins P6. 1952
Engine 312 5590
Onwards 311 511 311 91

BY APPOINTMENT
TO H.M. QUEEN ELIZABETH
THE QUEEN MOTHER
MOTOR CAR MANUFACTURERS

THE DAIMLER COMPANY LIMITED

Daimler

SPARES DIVISION

AYD 303
Water Pump Seal

MAJESTIC

(DF.316/7 DF.318/9)

SPARE PARTS CATALOGUE

Morris
Reto 4M 31.68 -

Seal for Diff Pinion PR 3517
Seal for Rear Axle PR 5659

Earlier Type
= DB18 Consort
Reg 104 Models

ENGINE NUMBERS

DF.316/7	180B	90000 ONWARDS
DF.318/9	180B Paton Carburettor. Grommett & Wyer	95000 TO 95021 92000 ONWARDS

CHASSIS NUMBERS

DF.316	RIGHT-HAND DRIVE	Top Link Bed A892	98300 TO 98749 98770 ONWARDS
DF.317	LEFT-HAND DRIVE		98750 TO 98769
DF.318	RIGHT-HAND DRIVE	Falcon XK/XP	99300 ONWARDS
DF.319	LEFT-HAND DRIVE	1940-66	99780 ONWARDS

THE DAIMLER COMPANY LIMITED, COVENTRY, ENGLAND

Telephone:
Coventry 27626

Telegraphic Address:
Daimler 'Phone Coventry

INTERPRETATION OF CATALOGUE

Attention is drawn to the lay-out of this catalogue. It will be observed that the heading of each assembly is printed in **BOLD BLOCK LETTERS,** whilst the spares relevant to each assembly are **printed in small type and inset to the right.**

The fact that certain items (printed in small type) are not "inset" indicates that they do not form part of any assembly and must, therefore, be ordered as individual items.

ILLUSTRATIONS

To aid identification of spares, "exploded" illustrations are incorporated in this catalogue.

These illustrations may be used in the following manner :—

(a) If a Crankshaft is required, the index shows that the details for the item are printed on page 3 and that it is illustrated on Plate 1. Turning to page 3, the necessary information for the ordering of the part is given, whilst the column headed "Plate No." indicates that reference to item number 20 on Plate 1 will give a photographic view of the component required.

(b) The details for each illustrated item are printed in the script in numerical Plate number order. An item may therefore be first identified photographically. For example, if Friction Pads are required for the Front Brake, a picture of the part may be found on Plate No. 20, together with the Plate reference number. It is now an easy matter to find Plate number "20—4" in the script and the Part No. and Technical Description are at once apparent.

ORDERING

Customers are advised to make themselves familiar with the method of ordering spare parts in accordance with the explanatory notes which follow.

PUBLICATION D.2 PRICE £1. 15. 0 PUBLISHED SEPTEMBER, 1962

INSTRUCTIONS FOR ORDERING SPARE PARTS

To avoid delay through inaccurate interpretation, IT IS OF GREAT IMPORTANCE that the information detailed in the following paragraphs be strictly adhered to when placing orders.

CAR TYPE

Always quote the engine and chassis numbers except when Stock Orders are placed, in which case the Year and Model must be indicated.

An order for spares in connection with an Automatic Transmission Unit must be accompanied by the **Transmission Serial Number.** If it is desired to replace the Converter Assembly, however, the order for this component must bear the **Serial number of the Converter** which will be found stamped on the engine side of the Flywheel, adjacent to the Starter Ring Gear.

DETAILS OF PARTS REQUIRED

When ordering, the most complete information should be given to enable us to deal with your requirements expeditiously and to minimise delay in the despatch of the goods. Therefore we strongly recommend that the following procedure be adopted :—

(1) Identify part with technical description in catalogue.

(2) On Order, quote (a) part number, (b) technical description.

Note : In no case should the illustration plate number be given.

(3) If doubt exists as to the part number or technical description, a dimensioned sketch will assist in the interpretation of the order, or, alternatively, the old part should accompany the order as a pattern. When patterns are sent, it is **most important** that they be labelled, indicating the name and address of the sender, together with any reference such as order number, etc. Patterns will not be returned unless instructions to that effect accompany the order. In the absence of such instructions, patterns will be scrapped after retention for a period of ONE WEEK.

(4) To order in "sets" is misleading. Please, therefore, **state the specific quantity required.**

SPECIAL ATTENTION

Particular attention is drawn to the fact that when such items as Wings, Doors, Door Glasses, etc., are required, care should be taken to indicate whether they are located on the left-hand or right-hand side of the car. The position is determined by the driver's own left or right hand when seated in the car.

Orders for Carpets, Casings, etc., should clearly state the precise colour required.

DESPATCH INSTRUCTIONS

The full address of the destination to which the goods are to be sent, together with that of the customer, should be clearly defined.

Whilst every effort will be made to observe customers' wishes as to the mode of transport, it is the normal custom to utilize the quickest possible method, whether it be post, passenger train or road transport, this being dependent upon the size and weight of the package and the destination.

PRICES

Current retail prices, shown in the Daimler Parts Master Price List, are subject to alteration without notice, and are for delivery at Works. Postage, carriage and packing will be charged extra.

DAMAGE BY FIRE OR ACCIDENT

Whilst every precaution is taken, we do not accept liability for damage which may be caused by fire to any motor car or part thereof entrusted to us for any purpose whatsoever. Nor is liability accepted for accidental damage.

INDEX TO SECTIONS

DESCRIPTION OF SECTIONS	PAGE	PLATE
ACCELERATOR CONTROLS (R.H. DRIVE)	33—36	10
ACCELERATOR CONTROLS (L.H. DRIVE)	39—42	11
AIR CLEANER (EXPORT MODELS ONLY)	30	9
AIR SILENCER (HOME MODELS ONLY)	28	8
AUTOMATIC TRANSMISSION	45—55	12—15
AUTOMATIC TRANSMISSION MOUNTING DETAILS	61	—
BRAKE CONTROLS AND HYDRAULICS	97—102	24
BRAKE VACUUM SERVO	105—106	25
BODY FITTINGS	187—216	—
BODY PANELS	182—186	—
BODY SHELL	181	—
CARBURETTERS	22—26	7
CHASSIS DF.316/7	166—170	38
CHASSIS DF.318/9	174—178	39
COOLING SYSTEM	153—154	35
CYLINDER BLOCK	2—6	1
CYLINDER HEAD	17—20	6
ELECTRICAL EQUIPMENT DF.316/7	217—231	40—41
ELECTRICAL EQUIPMENT DF.318/9	235—249	42—43
ELECTRICAL EQUIPMENT (HYDROSTEER)	253	—
EXHAUST SYSTEM	157—158	36
FRONT BRAKES (1st TYPE)	81—82	20
FRONT BRAKES (2nd TYPE)	89—90	22
FRONT SUSPENSION	74—78	19
FUEL SYSTEM	160—164	37
GEAR SELECTOR CONTROL	147—150	34
HANDBRAKE DF.316 (1st TYPE)	108—110	26
HANDBRAKE DF.316 AND DF.318 (2nd TYPE)	112—114	27
HANDBRAKE DF.317	116—118	28
HANDBRAKE DF.319	122—124	29
HEATER AND DEMISTER	256—258	44
OIL CLEANER	10	3
OIL PUMP	8	2
PROPELLER SHAFT	62	16
REAR AXLE DF.316/7	65—66	17
REAR AXLE DF.318/9	69—70	18
REAR BRAKES (1st TYPE)	85—86	21
REAR BRAKES (2nd TYPE)	92—94	23
ROAD WHEELS	80	—
STEERING OIL PUMP (HYDROSTEER)	143—144	33
STEERING RESERVOIR (HYDROSTEER)	138—140	32
STEERING UNIT AND LINKAGE	128—130	30
STEERING UNIT AND LINKAGE (HYDROSTEER)	133—136	31
TOOL KIT	262	—
WATER PUMP (1st TYPE)	12	4
WATER PUMP (2nd TYPE)	14	8
WINDSCREEN WASHER	260	45

INDEX TO PARTS

Description	Model DF.316/7 Page No.	Model DF.318/9 Page No.	Plate
A			
" A " Post Finishers	194	194	—
" A " Post Panels	185	185	—
Accelerator Control Rods ...	34—40	34—40	10—11
Accelerator Pedal Assembly ...	33—39	33—39	10—11
Accelerator Pedal Bracket ...	33—39	33—39	10—11
Accelerator Push Rod	33—39	33—39	10—11
Air Cleaner Element	30	30	9
Air Silencer Intake Pipe	28—30	28—30	8—9
Air Silencer Hose	28—30	28—30	8—9
Air Silencer Stay	28	28	8
Ammeter	225	242	41—43
Anti-Roll Bar	77	77	19
Anti-Roll Bar Bracket	77	77	19
Anti-Roll Bar Spindle	78	78	19
Ashtrays (see respective positions)	—	—	—
Automatic Transmission Case Assembly	45	45	12
Automatic Transmission Converter Assembly	45	45	—
Automatic Transmission Converter Valve Assembly	51	51	14
Automatic Transmission Dipstick...	45	45	12
Automatic Transmission Extension Case Assembly	52	52	15
Automatic Transmission First Clutch Piston Ring	49	49	13
Automatic Transmission First Clutch Piston	49	49	13
Automatic Transmission First Clutch Retractor Plate	49	49	13
Automatic Transmission Forward Free Wheel Unit	50	50	13
Automatic Transmission Friction Discs	49	49	13
Automatic Transmission Friction Plates	49	49	13
Automatic Transmission Front Planetary Carrier	50	50	13
Automatic Transmission Front Pump and Collector Ring ...	48	48	13
Automatic Transmission Front Ring Gear	50	50	13
Automatic Transmission Front Sun Gear	49	49	13
Automatic Transmission Governor Adjusting Lever	52	52	15
Automatic Transmission Governor Assembly	53	53	15
Automatic Transmission Governor Booster Spring	53	53	—
Automatic Transmission Governor Detent Piston	52	52	15
Automatic Transmission Governor Return Spring	53	53	15
Automatic Transmission Governor Shaft	53	53	15
Automatic Transmission Governor Shaft and Lever	52	52	15
Automatic Transmission Governor Valve and Fork	52	52	15
Automatic Transmission Governor Drive Gear	50	50	13
Automatic Transmission Inner Servo Piston	46	46	12
Automatic Transmission Kick Down Control Cam	53	53	15
Automatic Transmission Low and Forward Servo Cylinder ...	47	47	12
Automatic Transmission Low Band Plate	47	47	12
Automatic Transmission Low Lock-up Piston	47	47	12
Automatic Transmission Low Lock-up Piston Seal	47	47	12
Automatic Transmission Main Shaft	48	48	13
Automatic Transmission Main Shaft Bearing	50	50	13
Automatic Transmission Manifold Plate	51	51	14
Automatic Transmission Multi-Disc Clutch Repair Kit	55	55	—
Automatic Transmission Oil Filter	52	52	14
Automatic Transmission Low and Forward Brake Band	47	47	12
Automatic Transmission Oil Sump	52	52	14
Automatic Transmission Outer Servo	46	46	12
Automatic Transmission Overhaul Gasket Set	55	55	—
Automatic Transmission Overhaul Seal Kit	55	55	—
Automatic Transmission Parking Brake Gear	50	50	13
Automatic Transmission Parking Brake Rod	46	46	12
Automatic Transmission Parking Brake Piston	53	53	15
Automatic Transmission Parking Pawl and Toggle	53	53	15
Automatic Transmission Rear Planetary Carrier	49	49	13
Automatic Transmission Rear Pump Assembly	54	54	15
Automatic Transmission Rear Ring Gear	49	49	13
Automatic Transmission Rear Sun Gear	49	49	13
Automatic Transmission Relief Valve Body	51	51	14
Automatic Transmission Retractor Spring	49	49	13
Automatic Transmission Reverse Brake Band	47	47	12
Automatic Transmission Reverse Free Wheel Unit	50	50	13
Automatic Transmission Reverse Servo	46	46	12
Automatic Transmission Reverse Servo Cylinder	46	46	12
Automatic Transmission Selector Control Shaft	45	45	12
Automatic Transmission Servo Piston Seal	46	46	12
Automatic Transmission Spacer Plate	49	49	13
Automatic Transmission Speedometer Drive Gear Housing ...	53	53	15
Automatic Transmission Speedometer Driven Gear	54	54	15
Automatic Transmission Thrust Washer Kit	55	55	—
Automatic Transmission Universal Joint Flange	51	51	13
Automatic Transmission Valve Block	51	51	14
B			
' B-C ' Post Finishers	194	194	—
' B-C ' Post Assemblies	185	185	—
Backlight Filler Strip	211	211	—
Backlight Frame Finishers ...	211	211	—
Backlight Frame Finishers Joint Cover	211	211	—

INDEX TO PARTS

Description	Model DF.316/7 Page No.	Model DF.318/9 Page No.	Plate
B—*Continued*			
Backlight Glass	211	211	—
Basechamber, Bottom Half ...	6	6	1
Battery	229	245	—
Battery Angle Strap	191	191	—
Battery Cables	229	245	—
Battery Cradle	191	191	—
Battery Tie Rods	191	191	—
Big End Bearings	4	4	1
Blower Unit	256	256	44
Body Insulation	214	214	—
Body Mountings	216	216	—
Body Shell Complete	181	181	—
Bonnet Assembly	184	184	—
Bonnet Chrome Mouldings ...	190	190	—
Bonnet Hinge Assembly	189	189	—
Bonnet Lock Control Cable ...	189	189	—
Bonnet Lock Striker Assembly ...	189	189	—
Bonnet Motif Assembly	190	190	—
Bonnet Rubber Buffers	191	191	—
Bonnet Safety Catch	189	189	—
Bonnet Tape	188	188	—
Boot Light	223	241	40—42
Brake Fluid Supply Tank	98	98	24
Brake Hydraulic Hoses	99—102	99—102	24
Brake Hydraulic Non-Return Valve	98	98	24
Brake Hydraulic Non-Return Valve In Line	99	99	24
Brake Hydraulic Pipes	99—102	99—102	24
Brake Hydraulic Unions	100—102	100—102	24
Brake Master Cylinder	98	98	24
Brake Master Cylinder Reconditioning Kit	98	98	24
Brake Pedal	97	97	24
Brake Pedal and Master Cylinder Bracket	97	97	24
Brake Pedal Rubber Cover ...	97	97	24
Brake Vacuum Servo Air Cleaner	98	98	24
Brake Vacuum Servo Air Control Valve	105	105	25
Brake Vacuum Servo Bracket ...	106	106	25
Brake Vacuum Servo Main Cylinder	105	105	25
Brake Vacuum Servo Main Cylinder Repair Kit	106	106	—
Brake Vacuum Servo Unit ...	105	105	25
Brake Vacuum Servo Unit Repair Kit	106	106	—
Bumpers	187	187	—
C			
Cable Clips	231	249	—
Cables (Electrical)	230—231	248	41—43
Cables (High Tension)	20	20	—
Cables (High Tension) Rings and Grommets	20	20	—
Cables (Low Tension)	20	20	—
Calipers	81—92	81—92	20—23
Camshaft	2	2	1
Camshaft Bearing Liners	2	2	—
Camshaft Bearing Thrust Plate ...	2	2	1
Camshaft Chain Wheel	2	2	1
Camshaft Chain Wheel Lubricator	2	2	1
Camshaft Chain Wheel Thrust Washer	2	2	1
Cantrail Trim Fillets	210	210	—
Cappings (see respective components) ...	—	—	—
Carburetter Ball Sockets	25	25	7
Carburetter Bell Crank Lever ...	25	25	7
C—*Continued*			
Carburetter Bell Crank Lever Brackets	25	25	7
Carburetter Connecting Shafts ...	23	23	7
Carburetter Connecting Shafts Coupling	23	23	7
Carburetter Float	22	22	7
Carburetter Hand Control Connecting Rod	26	26	7
Carburetter Heat Shield	26	26	7
Carburetter Insulator	23	23	7
Carburetter Jet Needle	22	22	7
Carburetter Kick-down Lever ...	25	25	7
Carburetter Linking Petrol Pipe ...	24	24	7
Carburetter Needle and Seat ...	22	22	7
Carburetter Overflow Pipe ...	23	23	7
Carburetter Throttle Control Rod	25	25	7
Carburetter Throttle Relay Spring	25	25	7
Carburetter Throttle Spindle Lever	23	23	7
Carburetter Throttle Spring ...	25	25	7
CarburetterThrottleSpringCarrier	24	24	7
Carburetter Vacuum Suction Pipe	24	24	7
Carpets	213	213	—
Carpets (Non-Felted)	215	215	—
Carpets Retainers Fixing Strip ...	213	213	—
Carpets Retainers Rubber ...	213	213	—
Chassis	166—170	174—178	38—39
Cigar Lighter	228	244	41—43
Clock	225	243	41—43
Control Box	219	237	40—42
Connecting Rods	4	4	1
Courtesy Light Switch	229	245	41—43
Crankshaft	3	3	1
Crankshaft Chain Wheel	3	3	1
Crankshaft Main Bearings ...	3	3	1
Crankshaft Thrust Washers ...	3	3	1
Cubby Box Lid Lock	192	192	—
Cylinder Block Studs	2	2	1
Cylinder Head Cover	19	19	6
Cylinder Head Cover Gasket ...	19	19	6
Cylinder Head Gasket	17	17	6
Cylinder Head Studs	17	17	—
D			
'D' Post Assembly	185—186	185—186	—
'D' Post Finishers	194	194	—
Damper and Pulley	4	4	1
Dash Sidecasing	209	209	—
Demister Ducts	258	258	44
Differential Assembly	—	70	18
Differential Gears	—	70	18
Dipper Switch	227	244	41—43
Distributor	218—219	236	40—42
Distributor Bracket	—	236	42
Door Armrests	200	200	—
Door Cappings	194—195	194—195	—
Door Buffers	202—207	202—207	—
Door Check Arms	201—206	201—206	—
Door Check Arms Swivel Brackets	201—206	201—206	—
Door Chrome Finishers	201—206	201—206	—
Door Chrome Moulding	197	197	—
Door Draught Excluders	202—207	202—207	—
Door Fence Plate	202—207	202—207	—
Door Fully Trimmed	197—203	197—203	—
Door Glass	199—204	199—204	—
Door Glass Frames	198—203	198—203	—
Door Handles	199—205	199—205	—
Door Hinges	200—205	200—205	—

INDEX TO PARTS

Description	Model DF.316/7 Page No.	Model DF.318/9 Page No.	Plate
D—*Continued*			
Door less Locks and Remote Control	198—203	198—203	—
Door Lock and Remote Controls	198—203	198—203	—
Door Lock Striker Plates	199—204	199—204	—
Door Sealing Rubbers	201—207	201—207	—
Door Shells	181—185	181—185	—
Door Sill Assembly	181—185	181—185	—
Door Tread Plates	202—208	202—208	—
Door Trim Pads	206	206	—
Door Window Regulators	200—205	200—205	—
Drag Links	130	130	30—31
Drag Links Sockets	130	130	30—31
Draught Excluder (Doors)	202—207	202—207	—
Driving Mirror (Interior)	196	196	—
Dynamo	217	235	40—42
Dynamo Adjusting Strip	217	235	40—42
Dynamo Fan	217	235	40—42
Dynamo Pulley	217	235	40—42
Dynamo Support Bracket	217	235	40—42
E			
Earth Cables	229—230	246	—
Engine Mounting Brackets	166—167	174—175	38—39
Engine Steady Brackets	2	2	1
Exhaust Manifold	18	18	6
Exhaust Manifold Gaskets	18	18	6
Exhaust Pipes, Front	157	157	36
Exhaust Pipes, Gaskets	157	157	36
Exhaust Pipes, Hangers	157—158	157—158	36
Exhaust Pipes, Intermediate	157	157	36
Exhaust Silencer and Tail Pipes	157	157	36
F			
Facia Ashtrays	192	192	—
Facia Panel	192	192	—
Fan Cowls	153	153	35
Fan Belts	12—14	12—14	4—5
Flasher Unit	222	240	40—42
Flasher Warning Light	225	242	40—42
Flintkote	214	214	—
Flywheel Housing	61	61	—
Fog Lamp	223	241	40—42
Fog Lamp Switch	228	244	40—42
Front Apron Panel	184	184	—
Front Bench Seat	208—209	208—209	—
Front Brake Discs	82—90	82—90	20—22
Front Brake Hoses	101	101	24
Front Brake Hose Brackets	76	76	19
Front Bumper Assembly	187	187	—
Front Bumper Brackets	187	187	—
Front Calipers	81—89	81—89	20—22
Front Calipers Adaptor Plates	81—90	81—90	20—22
Front Calipers Bleed Screw & Ball	81—89	81—89	20—22
Front Calipers Bridge Pipes	81—89	81—89	20—22
Front Calipers Carrier Plates	81	81	20
Front Calipers Cylinder Block	81—89	81—89	20—22
Front Calipers Friction Pads	81—89	81—89	20—22
Front Calipers Piston	81—89	81—89	20—22
Front Calipers Repair Kit	81—89	81—89	20—22
Front Calipers Retractor Pin and Bush	81	81	20
Front Cross Member Bottom Plate	166	174	38—39

Description	Model DF.316/7 Page No.	Model DF.316/7 Page No.	Plate
F—*Continued*			
Front Flasher Lamp	221	239	40—42
Front Floor Cover Plate	181	181	—
Front Hubs	77	77	19
Front Number Plate Support	187	187	—
Front Seat Ashtray	209	209	—
Front Seat Runners	209	209	—
Front Shock Absorbers	78—169	78—178	19—38—39
Front Shock Absorber Brackets	170	178	38—39
Front Shock Absorber Bushes	78—169	78—178	19—38—39
Front Shock Absorber Rubber Buffers	78—169	78—178	19—38—39
Front Suspension Bump Stop	168	176	38—39
Front Suspension Pedestal	74	74	19
Front Suspension Pedestal Adjuster	74	74	19
Front Suspension Spring	74	74	19
Front Suspension Spring Locating Bracket	77	77	19
Front Suspension Spring Seating	74	74	19
Front Wing Assembly	182	182	—
Front Wing Reinforcing Brackets	183	183	—
Front Wing Sealing Plates	183—184	183—184	—
Front Wing Supports	183	183	—
Fuse Box	219	237	40—42
Fuses	219	237	—
G			
Gearbox Cone Rubber Mounting	167	175	34
Gear Selector Bell Crank Lever Support Bracket	149—150	149—150	38—39
Gear Selector Control Quadrant	147	147	34
Gear Selector Control Quadrant Cover	147	147	34
Gear Selector Hand Lever	147	147	34
Gear Selector Control Ball Joints	149—150	149—150	34
Gear Selector Control Bell Crank Levers	149—150	149 —150	34
Gear Selector Control Bottom Bracket	148	148	34
Gear Selector Control Contact Adjuster	148	148	34
Gear Selector Control Lever	148	148	34
Gear Selector Control Rods	149—150	149—150	34
Gear Selector Control Support Clamp	148	148	34
Gear Selector Control Tube	147	147	34
Gearbox Support Member	167	175	38—39
Gearbox Support Plate	5	5	1
Gearbox Trim Cover	214	214	—
Grommets	231	249	—
H			
Handbrake Cables Abutment Bracket	109	—	26
Handbrake Bell Crank Levers	109—118	112—124	26—29
Handbrake Idler Levers	109—117	113—123	26—29
Handbrake Idler Levers Clevis Pins	109—117	113—123	26—29
Handbrake Lever Attachment Plates	196	196	—
Handbrake Lever Assembly	108—116	112—122	26—29
Handbrake Lever Pawls	108—116	112—122	—

INDEX TO PARTS

Description	Model DF.316/7 Page No.	Model DF.318/9 Page No.	Plate
H—*Continued*			
Handbrake Lever Trigger and Pawl Springs	108—122	112—122	—
Handbrake Mechanism Repair Kit	86—94	94	—
Handbrake Operating Lever ...	85—94	94	21—23
Handbrake Operating Lever Clevis Pin	85—94	94	21—23
Handbrake Operating Lever Pivot Seat	85—94	94	21—23
Handbrake Rods	108—118	112—124	26—29
Handbrake Rods Eye Ends ...	108—118	112—124	26—29
Handbrake Rods Fork Ends ...	108—118	112—124	26—29
Handbrake Rods Levers	108—122	108—122	26—29
Handbrake Rods Lever Brackets ...	108—122	108—122	26—29
Handles (See " Doors ")			
Hardura (See " Body Insulation ")			
Harness (Electrical)	230	247—248	—
Header Trim Panel	209	209	—
Headlamps	220	238	41—43
Head, Side and Fog Lamps Switch	228	—	41
Heater Blower Unit	256	256	44
Heater Deflector Assembly ...	256	256	44
Heater Hoses	256	256	44
Heater Pipes	256	256	44
Heater Rotary Control Cables ...	257	257	44
Heater Rotary Control (Demister)	256	256	44
Heater Rotary Control (Temperature)	257	257	44
Heater Switch	257	257	44
Heater Unit	256	256	44
Horns	227	247	41—43
Hub Cap	80	80	—
Hydraulic Rams	135—136	135—136	31
Hydraulic Rams Anchor Brackets...	136	136	31
Hydraulic Rams Anchor Rubbers...	135	135	31
Hydraulic Rams Anchor Washers...	135	135	31
I			
Ignition and Starter Switch ...	227	243	41—43
Ignition Coil	218	236	41—43
Ignition Warning Light	224	—	40
Induction Manifold	18	18	6
Inspection and Charge Socket ...	227	—	41
Interior Light	223	240	41—43
Interior Light Switch	228	245	41—43
Intermediate Gear Control ...	—	244	—
J			
Jaw, Brake Pedal to Master Cylinder	97	97	24
K			
Kickdown Levers	35—42	35—42	10
L			
Lighting Switch	—	243	43
Long Range Driving Lamp (Pass Light)	223	241	40—42
Long Range Driving Lamp Switch (Pass Light)	228	244	41—43
Luggage Floor Assembly	186	186	—
M			
Make-up Pieces, Wing to Radiator	183	183	—
Main Floor Assembly	181—185	181—185	—
Mixture Control Cable	35—41	35—41	10—11
Mixture Control Lever	35—41	35—41	10—11
Mixture Control Lever Bracket ...	35—41	35—41	10—11
Mixture Control Rod	34—40	34—40	10—11
Mudshield Assembly	182	182	—
Mudshield Struts	183	183	—
N			
Number Plate Illumination Lamp...	222	240	40—42
O			
Oil Cleaner Balance Valve ...	10	10	3
Oil Cleaner Balance Valve Spring...	10	10	3
Oil Cleaner Body	10	10	3
Oil Cleaner Body Gasket	10	10	3
Oil Cleaner Element	10	10	3
Oil Dipstick	6	6	1
Oil Pressure Warning Light ...	224	242	40—42
Oil Pressure Warning Light Switch	229	248	41—43
Oil Pump Body	8	8	2
Oil Pump Body Bush	8	8	—
Oil Pump Body Gasket	8	8	2
Oil Pump Cover	8	8	2
Oil Pump Driven Gear	8	8	2
Oil Pump Driven Gear Bush ...	8	8	—
Oil Pump Driving Gear	8	8	2
Oil Pump Spindle	8	8	2
Oil Pump Spindle Spiral Gear ...	8	8	—
Oil Pump Spindle Thrust Washer...	8	8	2
Oil Release Valve	6	6	1
Oil Sump	6	6	1
Overrider	187	187	—
P			
Panel Light Switch	—	243	43
Panel Light Switch (Rheostat) ...	228	—	41
Petrol Filler Cap	161	161	37
Petrol Gauge	225	242	41—43
Petrol Hose (Filler)	161	161	37
Petrol Pipes	160—164	160—164	37

INDEX TO PARTS

Description	Model DF.316/7	Model DF.318/9	Plate
P—*Continued*	Page No.	Page No.	
Petrol Pump	164	164	37—41—43
Petrol Pump Diaphragm	164	164	—
Petrol Pump Filter	164	164	—
Petrol Pump Gaskets	164	164	—
Petrol Pump Glass Bowl	164	164	—
Petrol Pump Priming Lever Return Spring	164	164	—
Petrol Tank	160	160	37
Petrol Tank Bottom Sealing Ring...	213	213	—
Petrol Tank Gauge Unit	225	242	37—41—43
Petrol Tank Straps	212	212	—
Petrol Taps	162—163	162—163	37
Petrol Reserve Control	163	163	—
Petrol Reserve Tap Control Cable	163	163	37
Pistons	4	4	1
Piston Rings	4	4	—
Plenum Chamber Grille	190	190	—
Plenum Chamber Lattice	190	190	—
Plenum Chamber Tube	190	190	—
Propeller Shaft Centre Bearing ...	62	62	16
Propeller Shaft Centre Bearing Dust Shield	62	62	16
Propeller Shaft Centre Bearing Rubber Insulation	62	62	16
Propeller Shaft Centre Bearing Support	62	62	16
Propeller Shaft Flange Yokes ...	62	62	16
Propeller Shaft Front	62	62	16
Propeller Shaft Journals	62	62	16
Propeller Shaft Rear	62	62	16
Push Rods	3	3	1
Q			
R			
Radiator	153—154	153—154	35
Radiator Block	153—154	153—154	35
Radiator Bottom Hose	154	154	35
Radiator Cradle	153	153	35
Radiator Drain Tap	153	153	35
Radiator Rubber Mounting ...	154	154	35
Radiator Top Hose	154	154	35
Rear Apron Panel	186	186	—
Rear Axle Bumpstop	168	176	38—39
Rear Axle Casing	65	—	17
Rear Axle Companion Flange ...	—	70	18
Rear Axle Crown Wheel and Pinion	65—69	65—69	17—18
Rear Axle Differential Bearing ...	65—69	65—69	17—18
Rear Axle Differential Case ...	65	—	17
Rear Axle Gearwheel	65	—	17
Rear Axle Differential Lock Strap	65—69	65—69	17—18
Rear Axle Differential Pinion ...	65	—	17
Rear Axle Differential Shims ...	—	69	18
Rear Axle Nosepiece Assembly ...	65	—	—
Rear Axle Nosepiece Bumpstop ...	168	176	38—39
Rear Axle Pinion Bearings ...	65—69	65—69	17—18
Rear Axle Pinion Oil Seal ...	65—69	65—69	17—18
Rear Axle Pinion Shims	65—69	65—69	17—18
Rear Axle Shafts	66—70	66—70	17—18
Rear Axle Shafts Oil Seals ...	66—70	66—70	17—18
Rear Axle ' U ' Bolts	169	177	38—39
Rear Brake Discs	86—94	94	21—23
Rear Bumper Assembly	187	187	—
Rear Bumper Bar	187	187	—
Rear Bumper Bracket	188	188	—
Rear Bumper Medallion	188	188	—
Rear Bumper Overriders	187	187	—
Rear Calipers	85—92	85—92	21—23
Rear Calipers Adaptor Plates ...	86—94	86—94	21—23
Rear Calipers Bleed Screw and Ball	85—92	85—92	21—23

Description	Model DF.316/7	Model DF.316/7	Plate
R—*Continued*	Page No.	Page No.	
Rear Calipers Bridge Pipe... ...	85—92	85—92	21—23
Rear Calipers Carrier Plates ...	85	85	21
Rear Calipers Cylinder Block ...	85—92	85—92	21—23
Rear Calipers Friction Pads ...	85—92	85—92	21—23
Rear Calipers Piston	85—93	85—93	21—23
Rear Calipers Repair Kit	85—93	85—93	—
Rear Calipers Retractor Pin and Bush	85	85	21
Rear Calipers Shims	85—92	85—92	21—23
Rear Flasher Lamps	221	239	41—42
Rear Hubs	66—70	66—70	17—18
Rear Hub Bearings	66—70	66—70	17—18
Rear Hubs Oil Seal	66—70	66—70	17—18
Rear Number Plate Brackets ...	212	212	—
Rear Quarter Assemblies	186	186	—
Rear Quarter Cappings	195—196	195—196	—
Rear Quarter No Draught Ventilators	210	210	—
Rear Quarter Trim Pads	210	210	—
Rear Seat Armrests	209	209	—
Rear Seat Cushion	209	209	—
Rear Seat Loop Pull	209	209	—
Rear Seat Squab	209	209	—
Rear Shock Absorbers	170	178	38—39
Rear Shock Absorber Bushes ...	170	178	38—39
Rear Shock Absorber Rubber Buffers	170	178	38—39
Rear Spring	169	177	38—39
Rear Spring Eye Bolts	169	177	38—39
Rear Spring Front Eye Bracket ...	169	177	38—39
Rear Spring Shackle	169	177	38—30
Rebound Stop Rubber	—	176	39
Reverse Lamp	222	240	40—42
Reverse Lamp Switch	227	245	41—43
Road Wheels	80	80	—
Road Wheel Balance Weights ...	80	80	—
Rocker Shaft	18	18	6
Rocker Shaft Brackets	18	18	6
Rocker Oil Feed Pipe	6	6	1
Roof Assembly	181	181	—
Roof Centre Bow	208	208	—
Roof Listing Sticks	208	208	—
Rubberised Felt (See Body Insulation)			
Rubber Seals (See Sealing Rubbers)			
S			
Sealing Rubbers	215	215	—
Scuttle Chrome Mouldings ...	190	190	—
Shock Absorbers (See Front or Rear)			
Sidelamps	221	239	40—42
Sidelamps Cowls	184	184	—
Sidelamps Indicator	190	190	—
Sidelamps Sealing Washer ...	190	190	—
Solenoid Circuit Breaker	227	245	41—43
Spare Wheel Tray	168	176	38—39
Spare Wheel Tray Actuating Bolt Assembly	168	176	38—39
Spare Wheel Tray Actuating Nut...	168	176	38—39
Spare Wheel Tray Buffer	168	177	38—39
Sparking Plugs	20	20	—
Speedometers	224	241—242	40—42
Speedometers Flexible Cables ...	224	242	40—42
Starter Solenoid Switch	218	236	40—42
Starter Motor	218	236	40—42
Starter Motor Solenoid	218	236	40—42
Starter Ring Gear	61	61	—
Starting Jaw	4	4	—

INDEX TO PARTS

Description	Model DF.316/7	Model DF.318/9	
S—*Continued*	Page No.	Page No.	Plate
Starting Handle	—	262	—
Steering Arms	76	71	19
Steering Box Drop Arms	128—133	128—133	30—31
Steering Box Gaskets	128—133	128—133	30—31
Steering Box Main Nut	128—133	128—133	30—31
Steering Box Main Nut Roller ...	128—133	128—133	30—31
Steering Box Main Nut Steel Balls	128—133	128—133	30—31
Steering Box Oil Seals	128—133	128—133	38—39
Steering Box Outer Tube ...	128—133	128—133	30—31
Steering Column Control ...	129—134	129—134	30—31
Steering Column Control Horn Push Contacts	129—134	129—134	—
Steering Column Control Trafficator Lever	129—134	129—134	—
Steering Column Draught Excluder	128—133	128—133	—
Steering Column Stator Tube ...	129—134	129—134	30—31
Steering Column Stays	193	193	—
Steering Inner Column	128—133	128—133	30—31
Steering Lockstop	—	176	39
Steering Oil Pump (Hydrosteer) ...	143	143	33
Steering Oil Pump Coupling to Dynamo	144	144	33
Steering Oil Pump Flow Control Valve	143	143	33
Steering Oil Pump Flow Control Valve Return Spring	143	143	33
Steering Oil Pump Gaskets ...	143	143	33
Steering Oil Pump Oil Seals ...	143	143	33
Steering Oil Pump Repair Kit ...	143	143	—
Steering Oil Pump Rotor	143	143	33
Steering Oil Pump Rotor Shaft ...	143	143	33
Steering Oil Reservoir Filler Cap...	138	138	32
Steering Oil Reservoir Filter ...	138	138	32
Steering Oil Reservoir Gaskets ...	138	138	32
Steering Oil Reservoir Hoses ...	138—140	138—140	32
Steering Oil Reservoir Hoses Clips	138—140	138—140	32
Steering Oil Reservoir 'O' Rings	138	138	32
Steering Oil Reservoir Support Bracket	138	138	32
Steering Pivot Lever	128—134	128—134	30—31
Steering Wheel	129—134	129—134	30—31
Steering Wheel Clamp Lever ...	129—134	129—134	30—31
Steering Wheel Telescopic Dust Cover	129—134	129—134	30—31
Stop and Tail Lamp	222	240	40—42
Stop Lamp Switch	229	245	41—43
Sun Visors	196	196	—
Switch, Courtesy Light	229	245	41—43
Switch, Dipper	227	244	41—43
Switch, Fog Lamp	228	244	41
Switch, Head, Side, and Fog Lamps	228	—	43
Switch, Heater Unit	228	243	41—43
Switch, Interior Light	228	245	41—43
Switch, Lighting	—	243	43
Switch, Long Range Driving Lamp	228	244	41—43
Switch, Oil Pressure Warning Light	229	248	41—43
Switch, Panel Light	—	243	43
Switch, Panel Light (Rheostat) ...	228	—	41
Switch, Starter and Ignition ...	227	243	41—43
Switch, Stop Lamp	229	245	41—43
Switch, Windscreen Wiper ...	228	243	41—43
T			
Tappets	3	3	1
Temperature Gauge	—	243	41—43
Temperature Transmitter (Thermometer)	—	243	41—43
Thermometer	227	—	41
Thermostat Unit	19	19	6

Description	Model DF.316/7	Model DF.318/9	
T—*Continued*	Page No.	Page No.	Plate
Throttle Control Cable	35—41	35—41	10—11
Throttle Control Lever	34—40	34—40	10—11
Throttle Control Rod	34—40	34—40	10—11
Throttle Control Return Spring ...	34—40	34—40	10—11
Throttle Control Shaft	33—39	33—39	10—11
Throttle Control Tube	33—39	33—39	10—11
Timing Chain	3	3	1
Timing Chain Cover	3	3	1
Timing Chain Tensioner	3	3	1
Timing Chain Tensioner Adjusting Rod	3	3	1
Timing Chain Tensioner Slipper ...	3	3	1
Torque Links	7S	75	19
Track Rod	130—135	130—135	30—31
Track Rod Rubber Boot	130—135	130—135	30—31
Track Rod Socket	130—135	130—135	30—31
Transverse Links, Bottom ...	74	74	19
Transverse Links, Top	75	75	19
Trunk Lid Assembly	186	186	—
Trunk Lid Hinge	212	212	—
Trunk Lid Lock Assembly	212	212	—
Trunk Lid Locking Barrel ...	212	212	—
Trunk Lid Motifs	211	211	—
Trunk Lid Rubber Buffer	212	212	—
Trunk Lid Seal	212	212	—
Tyres...	80	80	—
U			
Underfelts	213	213	—
'U' Bolts	169	177	38—39
V			
Vacuum Servo Unit	105	105	25
Valve Exhaust	17	17	6
Valve Guides	17	17	—
Valve Inlet	17	17	6
Valve Inserts	17	17	—
Valve Rockers	18	18	6
Valve Springs	17	17	6
W			
Water Pipes and Gaskets	19	19	6
Water Pump Body	12—14	12—14	4—5
Water Pump Cover Plate	12	12	4—S
Water Pump Cover Plate Gasket...	12	12	4—5
Water Pump Fan Pulley	12—14	12—14	4—5
Water Pump Gasket	12—14	12—14	4—5
Water Pump Gland	12	12	4
Water Pump Seal	—	14	5
Water Pump Spindle	12	—	4
Water Pump Spindle and Bearing...	—	14	5
Water Pump Spindle Bearing ...	12	—	4
Wheel Arch Assemblies	186	186	—
Wheel Balance Weights	80	80	—
Window Regulators (See 'Doors')	—	—	—
Windscreen Frame Chrome Finishers	192	192	—

INDEX TO PARTS

Description	Model DF.316/7	Model DF.318/9	
W—*Continued*	Page No.	Page No.	Plate
Windscreen Frame Chrome Finishers Joint Cover	192	192	—
Windscreen Frame Rubber Filler Strip	191	191	—
Windscreen Frame Seal	191	191	—
Windscreen Glass	191	191	—
Windscreen Panel Assembly ...	185	185	—
Windscreen Washer Adaptor ...	260	260	45
Windscreen Washer Bracket ...	260	260	45
Windscreen Washer Control Valve	260	260	45
Windscreen Washer Jar	260	260	45
Windscreen Washer Jar Mounting Block	260	260	45
Windscreen Washer Jet Body ...	260	260	45

Description	Model DF.316/7	Model DF.318/9	
W—*Continued*	Page No.	Page No.	Plate
Windscreen Washer Jet Cleaning Button	260	260	45
Windscreen Washer Pump and Cover	260	260	45
Windscreen Washer Strainer Tube	260	260	45
Windscreen Washer Tee Piece ...	260	260	45
Windscreen Wiper Arms ...	226	246	41—43
Windscreen Wiper Blades ...	226	247	41—43
Windscreen Wiper Bracket ...	226	247	41—43
Windscreen Wiper Casings ...	226	246	41—43
Windscreen Wiper Motor ...	225	246	41—43
Windscreen Wiper Switch ...	228	243	41—43
Windscreen Wiper Wheelbox ...	226	246	41—43

CYLINDER BLOCK

Part No.	Description	Plate No.	No. per Unit	Remarks
430263	**CYLINDER BLOCK**	1—1	1	
259918	**Core Plug** (Welch Washer) at top of Block		1	
419929	**Core Plug** (Welch Washer) at Camshaft Rear End		1	
263549	**Core Plug** (Welch Washer) at side of Cylinder Block		9	
422503/22	**Plug** (Alum.) in Oil Gallery		2	
425726	**Plug** (Taper) on side of Block		3	
420304	**Dowel,** R.H. Rear, locating Gearbox Support Plate and Bell Housing		1	
428423	**Dowel,** L.H. Rear, Locating Gearbox Support Plate and Bell Housing		1	
424979	**Stud,** for fixing Cylinder Head to Block		17	
13107	**Nut,** on Stud		17	
422500/04	**Washer,** under Nut		17	
422364	**Oil Indicator Tube**		1	
420609	**Liner,** for Camshaft Front Bearing		1	
420610	**Liner,** for Camshaft Intermediate Bearing		2	
422200	**Liner,** for Camshaft Rear Bearing		1	
422583	**Bush** for Oil Pump Spindle		1	
420304	**Dowel,** Locating Bearing Caps		8	
21108/26	**Bolt,** securing Bearing Caps		8	
402137	**Tab Washer** on Bolt		8	
22107/04	**Plug,** in Oil Gallery		3	
425509	**Washer,** Copper, on Plug Block		3	
431285/01	**Drain Plug,** in Cylinder Block		1	
422506/05	**Washer,** on Plug		1	
306254	**STEADY BRACKET FOR ENGINE**	1—2	1	
22105/07	**Screw,** Set, securing Steady Bracket		4	
430241/05	**Washer,** Spring, on Setscrew		4	
428984	**LUBRICATOR ASSEMBLY FOR CHAIN WHEEL**	1—3	1	
425896	**Tab Washer,** securing Lubricator		1	
135174	**CAMSHAFT**	1—4	1	
426126	**Thrust Plate,** for Camshaft Bearing	1—5	1	
22105/07	**Screw,** Set, for Thrust Plate		2	
269656	**Tab Washer,** on Setscrews		2	
430740	**CAMSHAFT CHAIN WHEEL ASSEMBLY**	1—6	1	
422510/21	**Key,** for Camshaft Chain Wheel	1—7	1	
42S758	**Thrust Washer,** for Camshaft Chain Wheel	1—8	1	
425838	**Nut,** securing Camshaft Chain Wheel		1	
425869	**Tab Washer,** under Nut		1	

CYLINDER BLOCK

Part No.	Description	Plate No.	No. per Unit	Remarks
320444	**TIMING CHAIN**	1—9	1	
426076	**CHAIN TENSIONER BODY**	1—10	1	
422506/24	**Washer,** on Chain Tensioner Body	1—11	1	
426078	**Adjusting Rod,** for Chain Tensioner	1—12	1	
425990	**Spring,** on Adjusting Rod	1—13	1	
12104/03	**Screw,** Set, on Adjusting Rod		1	
426077	**Plunger,** for Chain Tensioner	1—14	1	
425989	**Spring,** controlling Plunger	1—15	1	
426392	**Cover** (Rubber) on Chain Tensioner Body	1—16	1	
428323	**CHAIN TENSIONER SLIPPER ASSEMBLY**	1—17	1	
426117	**Pivot Pin,** supporting Slipper		1	
426120	**Bracket,** steadying Pivot Pin		1	
22105/05	**Screw,** Set, securing Steady Bracket		1	
426119	**Tab Washer**		1	
427884	**TAPPET**	1—18	12	
430730	**PUSH ROD**	1—19	12	
135820	**CRANKSHAFT**	1—20	1	
305408	**Main Bearing** on front and rear Journals of Crankshaft (standard size)	1—21	4 halves	
305409	**Main Bearing** on intermediate Journals of Crankshaft (standard size)	1—22	4 halves	
	MAIN BEARINGS are obtainable, to the Part Numbers shown, in the following undersizes:— —.010″ —.020″ —.030″ —.040″			
305408/1	**Main Bearing,** front and rear (.010″ undersize)	1—21	4 halves	Repco 4M 3164 shells
305409/1	**Main Bearing,** intermediate (.010″ undersize)	1—22	4 halves	With width altered + Location
305408/2	**Main Bearing,** front and rear (.020″ undersize)	1—21	4 halves	Tabs on front + Rear.
305409/2	**Main Bearing,** intermediate (.020″ undersize)	1—22	4 halves	
305408/3	**Main Bearing,** front and rear (.030″ undersize)	1—21	4 halves	
305409/3	**Main Bearing,** intermediate (.030″ undersize)	1—22	4 halves	
305408/4	**Main Bearing,** front and rear (.040″ undersize)	1—21	4 halves	
305409/4	**Main Bearing,** intermediate (.040″ undersize)	1—22	4 halves	
305347/1	**Thrust Washer,** at Crankshaft front bearings (.0920″ thick)	1—23	2	**SELECTIVE SIZES**
305347/2	**Thrust Washer** at Crankshaft front bearings (.0945″ thick)	1—23	2	
305347/3	**Thrust Washer** at Crankshaft front bearings (.0970″ thick)	1—23	2	
422510/62	**Key** for Crankshaft	1—24	2	
423005	**Thrust Washer** on Crankshaft	1—25	1	
420084	**Chain Wheel** on Crankshaft	1—26	1	
425214	**Oil Shield** on Crankshaft	1—27	1	

CYLINDER BLOCK

Part No.	Description	Plate No.	No. per Unit	Remarks
307623	**DAMPER AND PULLEY ASSEMBLY**	1—28	1	
304482	**Hub,** on Crankshaft		1	
304483	**Pulley,** on Hub		1	
307624	**Damper** (Metalastik 51/192/2)		1	
425888	**Bolt,** securing Damper to Hub		6	
423004	**Tab Washer,** locking Bolts		3	
13106	**Nut,** on Bolts		6	
420917	**STARTING JAW**	1—29	1	
401599	**Tab Washer,** locking Starting Jaw	1—30	1	
302138	**CONNECTING ROD (LESS BEARINGS)**	1—31	6	
422814	**Bolt,** securing Caps		12	
415368	**Tab Washer,** on Bolts		12	
420327	**Dowel,** between Cap and Connecting Rod		12	
422812	**Bolt,** securing Gudgeon Pin		6	
405149	**Tab Washer,** on bolts		6	
303842	**Bearing,** Big End (standard size)	1—32	12 halves	
	BIG END BEARINGS are obtainable, to the Part Numbers shown, in the following undersizes:— —.010″ —.020″ —.030″ —.040″			
303842-1	**Bearing,** Big End (.010″ undersize)	1—32	12 halves	
303842-2	**Bearing,** Big End (.020″ undersize)	1—32	12 halves	
303842-3	**Bearing,** Big End (.030″ undersize)	1—32	12 halves	
303842-4	**Bearing,** Big End (.040″ undersize)	1—32	12 halves	
307588	**PISTON, COMPLETE (standard size)**	1—33	6	
430705	**Pressure Ring,** upper (Chromium Plated)		6	
430706	**Pressure Ring,** intermediate and lower		12	
430707	**Scraper Ring**		6	
430708	**Gudgeon Pin,** retaining Piston to Connecting Rod		6	
	PISTONS AND RINGS are obtainable to the Part Numbers shown in the following oversizes:— +.010″ +.020″			
307589	**PISTON, COMPLETE (.010″ oversize)**	1—33	6	
430747	**Pressure Ring,** upper (Chromium Plated)		6	
430749	**Pressure Ring,** intermediate and lower		12	
430751	**Scraper Ring**		6	
430708	**Gudgeon Pin,** retaining Piston to Connecting Rod		6	

Part No.	Description	Plate No.	No. per Unit	Remarks
307590	**PISTON, COMPLETE (.020" oversize)**	1—33	6	
430748	**Pressure Ring,** upper (Chromium Plated)		6	
430750	**Pressure Ring,** intermediate and lower		12	
430752	**Scraper Ring**		6	
430708	**Gudgeon Pin,** retaining Piston to Connecting Rod		6	
132455	**INSPECTION COVER FOR TAPPETS**	1—34	1	
301332	**Gasket,** for Inspection Cover (Cork)	1—35	1	
21105/18	**Bolt,** securing Inspection Cover to Cylinder Block		6	
422506/03	**Washer,** on Bolt		6	
134337	**CHAIN COVER PLATE**	1—36	1	
134338	**Gasket,** between Cover Plate and Crankcase/Sump	1—37	1	
22105/06	**Screw,** Set, securing Chain Cover Plate		2	
269656	**Tab Washer,** on Setscrew		2	
306290	**CHAIN COVER ASSEMBLY**	1—38	1	
423200/05	**Oil Seal,** in Chain Cover (Superfect 319212)	1—39	1	
301378	**Gasket,** between Chain Cover and Cover Plate	1—40	1	
22105/07	**Screw,** Set, securing Chain Cover and Cover Plate		11	
22105/06	**Screw,** Set, securing Chain Cover and Cover Plate		3	
423006	**Stud,** for Dynamo adjustment		1	
13105	**Nut,** on Setscrews		3	
430241/05	**Washer,** Spring on Setscrews and Studs		15	
135809	**GEARBOX SUPPORT PLATE**	1—41	1	
22105/07	**Screw,** Set, securing Support Plate		3	
430241/05	**Washer,** Spring, on Setscrews		3	

CYLINDER BLOCK

Part No.	Description	Plate No.	No. per Unit	Remarks
134891	**OIL SUMP (CAST TYPE)**	1—42	1	
305249	**Bottom Cover,** for Oil Sump	1—43	1	FOR USE ONLY WHEN CAST OIL SUMP IS FITTED
426851	**Gasket,** between Oil Sump and Bottom Cover	1—44	1	
22105/05	**Screw,** Set, securing Bottom Cover to Oil Sump		6	
430241/05	**Washer,** Spring, on Setscrew		6	
431285/06	**Drain Plug,** for Oil Sump	1—45	1	
42B015	**Washer** (Copper) on Drain Plug	1—46	1	
134899	**Tray,** for Oil Sump	1—47	1	
22104/05	**Screw,** Set, securing Tray		4	
422464	**Tabwasher,** on Setscrews		4	
22105/08	**Screw,** Set, securing Oil Sump to Cylinder Block (Short)		22	
22105/30	**Screw,** Set, securing Oil Sump to Cylinder Block (Long)		2	
430241/05	**Washer,** Spring, on Setscrew		24	
420304	**Dowel,** locating Sump		2	
135116	**BASECHAMBER BOTTOM HALF (CASTING)**	1—48	1	FOR USE ONLY WHEN STEEL OIL SUMP IS FITTED
135118	**OIL SUMP (PRESSING)**	1—49	1	
305658	**Gasket,** between Oil Sump and Base Chamber	1—50	1	
22105/06	**Screw,** Set, securing Oil Sump to Base Chamber		21	
430241/05	**Washer,** Spring, on Setscrews		21	
431285/06	**Drain Plug,** for Oil Sump	1—51	1	
42B015	**Washer** (Copper) on Drain Plug	1—52	1	
22105/08	**Screw,** Set, securing Base Chamber to Cylinder Block (Short)		22	
22105/30	**Screw,** Set, securing Oil Sump to Cylinder Block (Long)		2	
430241/05	**Washer,** Spring, on Setscrew		24	
420304	**Dowel,** locating Sump		2	
422902	**OIL RELEASE VALVE**	1—53	1	
422903	**Spring,** for Oil Release Valve	1—54	1	
420139	**Cap,** Retaining Oil Release Valve in Cylinder Block	1—55	1	
420338	**Gasket,** between Cap and Cylinder Block	1—56	1	
22105/07	**Screw,** Set, securing Cap		2	
430241/05	**Washer,** Spring, on Setscrews		2	
302391	**OIL DIPSTICK**	1—57	1	
301429	**ROCKER OIL FEED PIPE TO CYLINDER HEAD**	1—58	1	
425734	**Connection,** for Rocker Oil Feed Pipe	1—59	2	

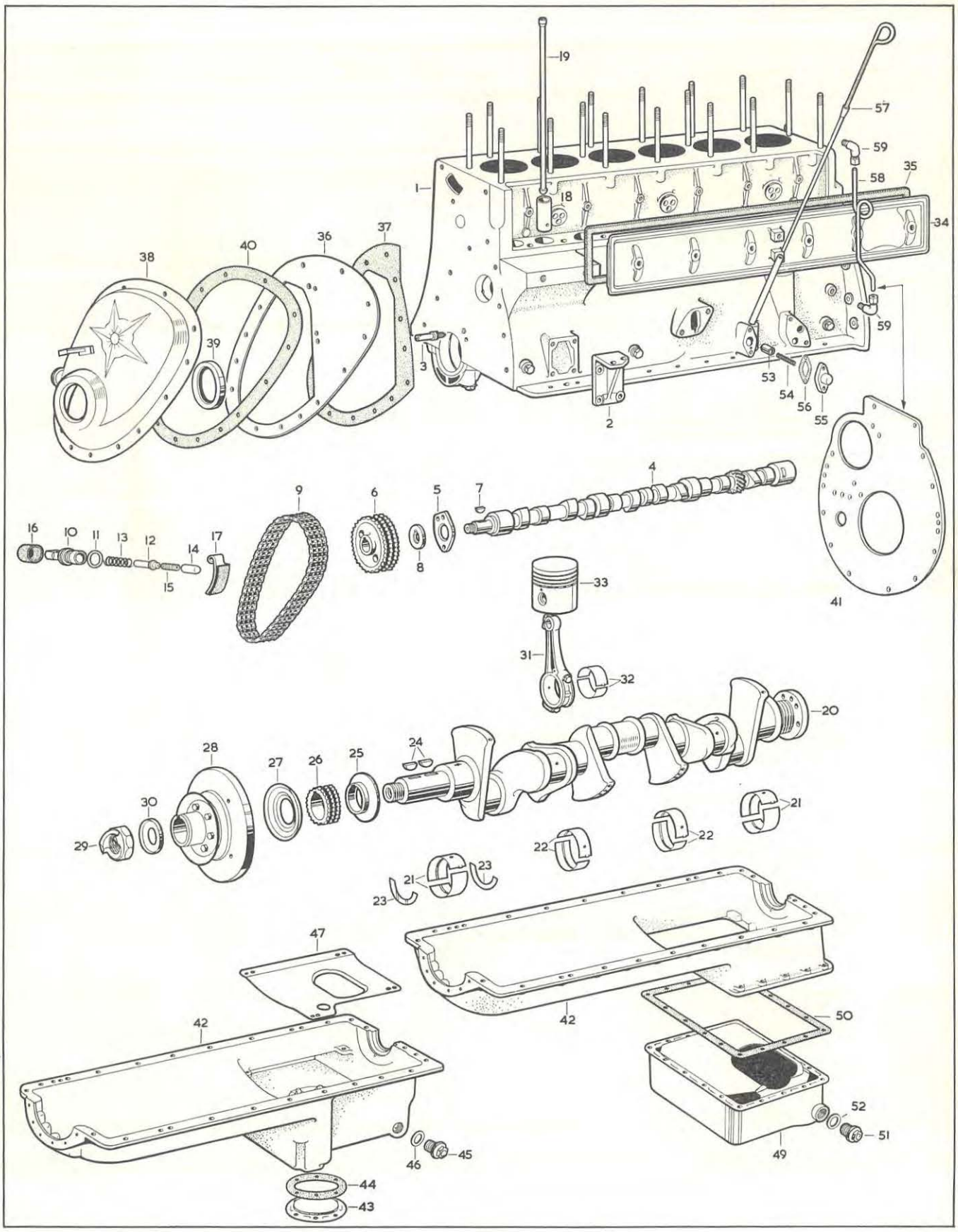
19
57
59
35
58
1
18
34
38
40
36
37
39
3
2
53
54
56
55
59
41
4
9
6
5
7
16
10
11
13
12
14
17
15
8
33
31
32
20
28
27
26
25
24
30
29
21
22
22
21
23
23
47
42
42
50
52
51
49
46
45
44
43

PLATE 1

OIL PUMP

Part No.	Description	Plate No.	No. per Unit	Remarks
430727	**OIL PUMP BODY ASSEMBLY**	2—1	1	
430160	**Bush,** in Oil Pump Body		1	
419953	**Gasket,** for Oil Pump Body	2—2	1	
21107/09	**Bolt,** securing Oil Pump Body		2	
413855	**Tab Washer,** locking Bolts		2	
419952	**OIL PUMP SPINDLE ASSEMBLY**	2—3	1	
419950	**Spindle only**		1	
422510/11	**Key,** for Pump Spindle		1	
403374	**Spiral Gear,** on Spindle		1	
401831	**Thrust Washer,** under Spiral Gear	2—4	1	
430306	**DRIVING GEAR IN OIL PUMP**	2—5	1	
430307	**DRIVEN GEAR AND BUSH ASSEMBLY IN OIL PUMP**	2—6	1	
426868	**Bush,** in Driven Gear		1	
431423	**OIL PUMP COVER AND STRAINER ASSEMBLY**	2—7	1	
22104/06	**Screw,** Set, securing Cover		1	
423044	**Tab Washer,** locking Setscrew		1	

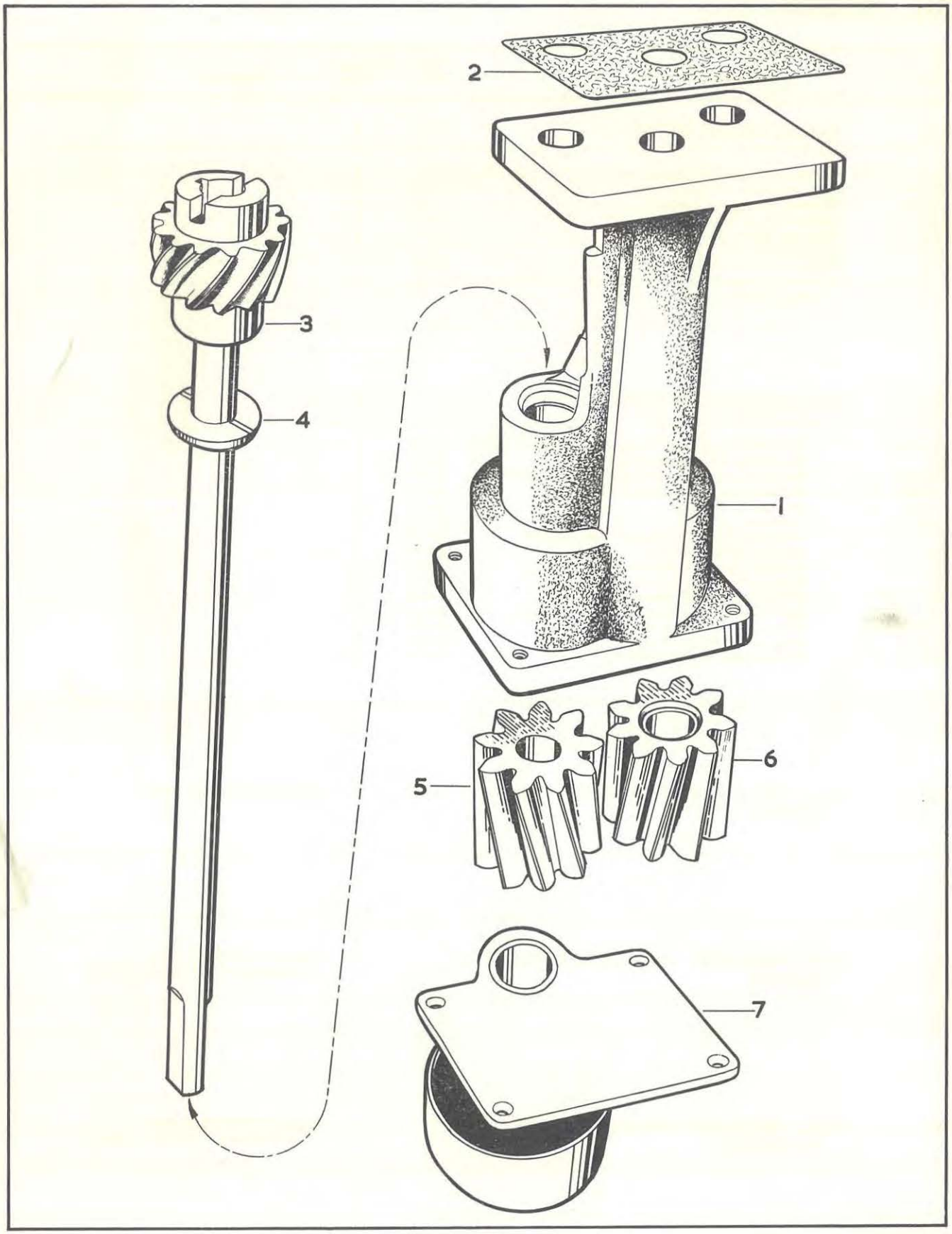

PLATE 2

OIL CLEANER

Part No.	Description	Plate No.	No. per Unit	Remarks
307585	**OIL CLEANER BODY**	3—1	1	
420555	**Gasket,** between Oil Cleaner Body and Cylinder Block	3—2	1	
21106/09	**Bolt,** securing Oil Cleaner Body		2	
430241/06	**Washer,** Spring, on Bolts		2	
422762	**Screw,** for Centre Tube	3—3	1	
420628	**Balance Valve,** for Oil Cleaner	3—4	1	
420629	**Spring,** for Balance Valve	3—5	1	
420644	**Plate,** for Spring Reaction	3—6	1	
422516/11	**Circlip** (¾" inside dia.), securing Balance Valve in Oil Cleaner Body	3—7	1	
307646	**OIL CLEANER ASSEMBLY (41583)**		1	
307646/01	**Joint Ring,** between Container and Body (137584)	3—8	1	
6147	**Top Plate,** for Element (134282)	3—9	1	
307646/02	**Centre Tube,** from Body to Container (104294)	3—10	1	
302466/03	**Washer,** on Centre Tube (173119)	3—11	1	
301760/01	**Element** (FG.2362)	3—12	1	
307646/03	**Container** (41590)	3—13	1	
6163	**Retaining Ring,** for Bottom Plate (174966)	3—14	1	
6886	**Bottom Plate** (134477)	3—15	1	
6161	**Washer** (Felt), for Bottom Plate (141251)	3—16	1	
6160	**Washer,** for Bottom Plate (174660)	3—17	1	
6159	**Spring,** for Bottom Plate (160441)	3—18	1	
6158	**Seal** (Rubber), for Container Bolt (137367)	3—19	1	
307646/10	**Bolt,** securing Container (46321)	3—20	1	
307646/11	**Plug,** for Container (104278)	3—21	1	
307646/12	**Washer,** for Plug (140196)	3—22	1	
422569	**OIL PRESSURE INDICATOR SWITCH (1504807)**	3—23	1	**Fitted to DF.316/7 only**
432049	**OIL PRESSURE INDICATOR SWITCH (7954117)**		1	**Fitted to DF.318/9 only Alternative to Switch 432133**
432133	**OIL PRESSURE INDICATOR SWITCH (P.S.5307/07)**		1	**Fitted to DF.318/9 only Alternative to Switch 432049**

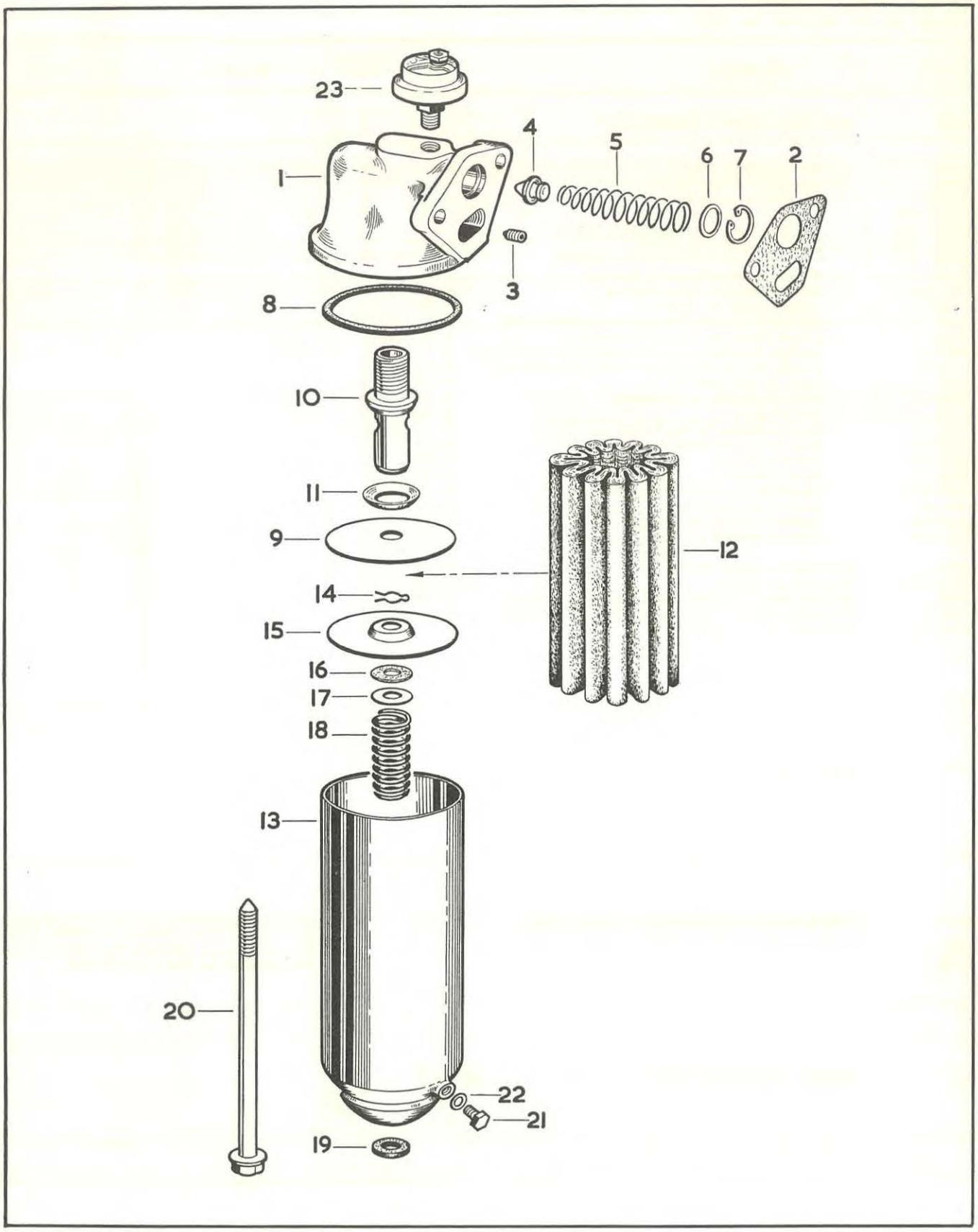

PLATE 3

WATER PUMP

FITTED UP TO ENGINE No. 90501

Part No.	Description	Plate No.	No. per Unit	Remarks
430791	**WATER PUMP ASSEMBLY**		1	
134461	**Water Pump Body**	4—1	1	
420146	**Spindle,** for Pump Body	4—2	1	
405385	**Flinger,** on Pump Spindle	4—3	1	
411585 Hoff. } 418729 SKF. }	**Bearing,** Inner, on Spindle Hoffman No. 2897—SKF. No. 224805	4—4	1	
411536 Hoff. } 418728 SKF. }	**Bearing,** outer, on Spindle Hoffman No. 3179—SKF. No. 402703	4—5	1	
405383	**Distance Piece,** between Bearings	4—6	1	
422517/26	**Circlip,** locating Outer Bearing	4—7	1	
302848	**Vane Wheel,** on Spindle	4—8	1	
425037	**Gland,** on Spindle (Morgan Crucible SK.ZY680)	4—9	1	
304703	**Cover Plate,** for Water Pump Body	4—10	1	
304704	**Gasket,** between Cover Plate and Water Pump Body	4—11	1	
12305/08	**Screw,** Set, securing Cover Plate to Pump Body	4—12	3	
13105	**Nut,** on Setscrew	4—13	3	
430241/05	**Washer,** Spring, on Setscrews	4—14	3	
304479	**Fan Pulley**	4—15	1	
425701	**Centre Piece,** for Fan Pulley	4—16	1	
422510/13	**Key,** for Centre Piece	4—17	1	
422500/05	**Washer,** Plain	4—18	1	
13408	**Nut,** Slotted	4—19	1	
422501/17	**Split Pin**	4—20	1	
22104/06	**Screw,** Set, securing Fan Blade to Pulley	4—21	4	
430241/04	**Washer,** Spring, on Setscrew	4—22	4	
422521/29	**Grease Nipple** ($\frac{1}{8}$" Gas)	4—23	1	
422260	**Nozzle,** for Heater Pipe	4—24	1	
422506/16	**Washer,** on Nozzle	4—25	1	
304705	**Gasket,** between Water Pump and Cylinder Block	4—26	1	
21105/08	**Bolt,** securing Water Pump Body to Cylinder Block		4	
430241/05	**Washer,** Spring, on Bolt		4	
30B243	**FAN BLADE ASSEMBLY (6 BLADE)**		1	
30824B	**FAN BLADE ASSEMBLY (8 BLADE)**	4—27	1	**When fitting 308248 to Cars prior to Chassis Nos. 99061 R.H. Drive, or 98760 L.H. Drive, existing Radiator Fan Cowl must be replaced by Fan Cowl 136229**
302511	**BELT, DRIVING FAN**	4—28	1	

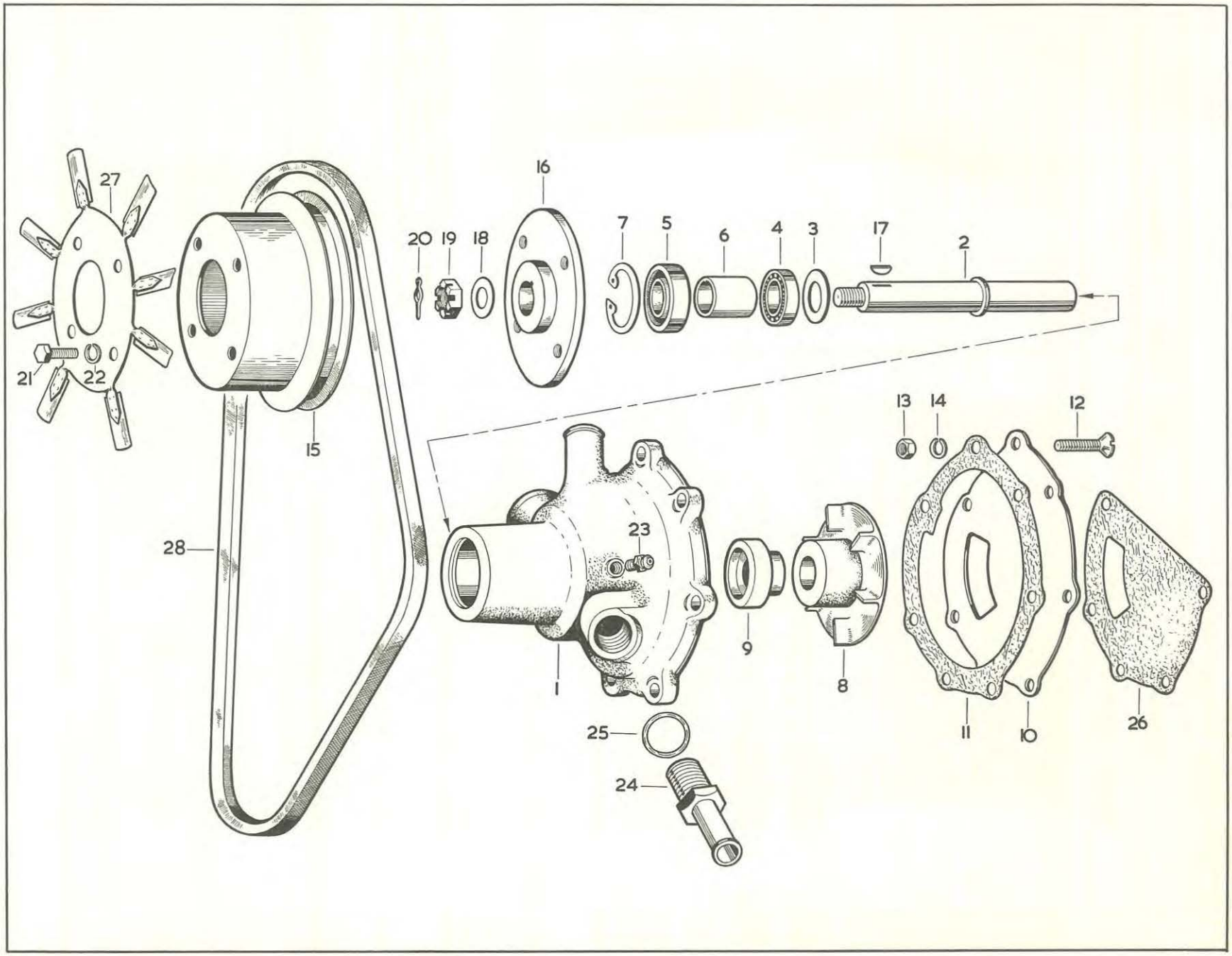

PLATE 4

WATER PUMP

FITTED TO ENGINE No. 90502 AND SUBS.

Part No.	Description	Plate No.	No. per Unit	Remarks
308030	**WATER PUMP ASSEMBLY**		1	
9378	**Water Pump Body** (18484)	5—1	1	
431367	**Spindle and Bearing** (Hoff. N4083F)	5—2	1	
431368	**Locating Screw,** for Spindle Bearing	5—3	1	
431369	**Washer** (Fibre), on Locating Screw	5—4	1	
431370	**Seal Assembly** (Super S.C.D.331/62)	5—5	1	
431371	**Thrower Ring,** on Spindle Bearing	5—6	1	
308000	**Rotor,** on Spindle	5—7	1	
308066	**Hub,** for Fan Pulley	5—8	1	
12305/08	**Bolt,** for Pump Body	5—9	3	
13105	**Nut,** on Bolts	5—10	3	
430241/05	**Washer,** Spring, under Nuts	5—11	3	
304703	**Cover Plate,** for Water Pump Body	5—12	1	
304704	**Gasket,** between Cover Plate and Water Pump Body	5—13	1	
422260	**Nozzle,** for Heater Pipe	5—14	1	
422506/16	**Washer,** for Nozzle	5—15	1	
304479	**Fan Pulley**	5—16	1	
12104/06	**Screw,** Set, securing Fan Blade to Fan Pulley		4	
430241/04	**Washer** (Spring), on Setscrew		4	
304705	**Gasket,** between Water Pump and Cylinder Block	5—17	1	
21105/08	**Bolt,** securing Water Pump to Cylinder Block		3	
430241/05	**Washer,** Spring, on Bolts		3	
308243	**FAN BLADE ASSEMBLY (6 BLADE)**		1	
308248	**FAN BLADE ASSEMBLY (8 BLADE)**	5—18	1	**When fitting 308248 to Cars prior to Chassis Nos. 99061, R.H.D. or 98760, L.H.D., existing Radiator Fan Cowl must be replaced by Fan Cowl 136229**
302511	**BELT, DRIVING FAN**	5—19	1	

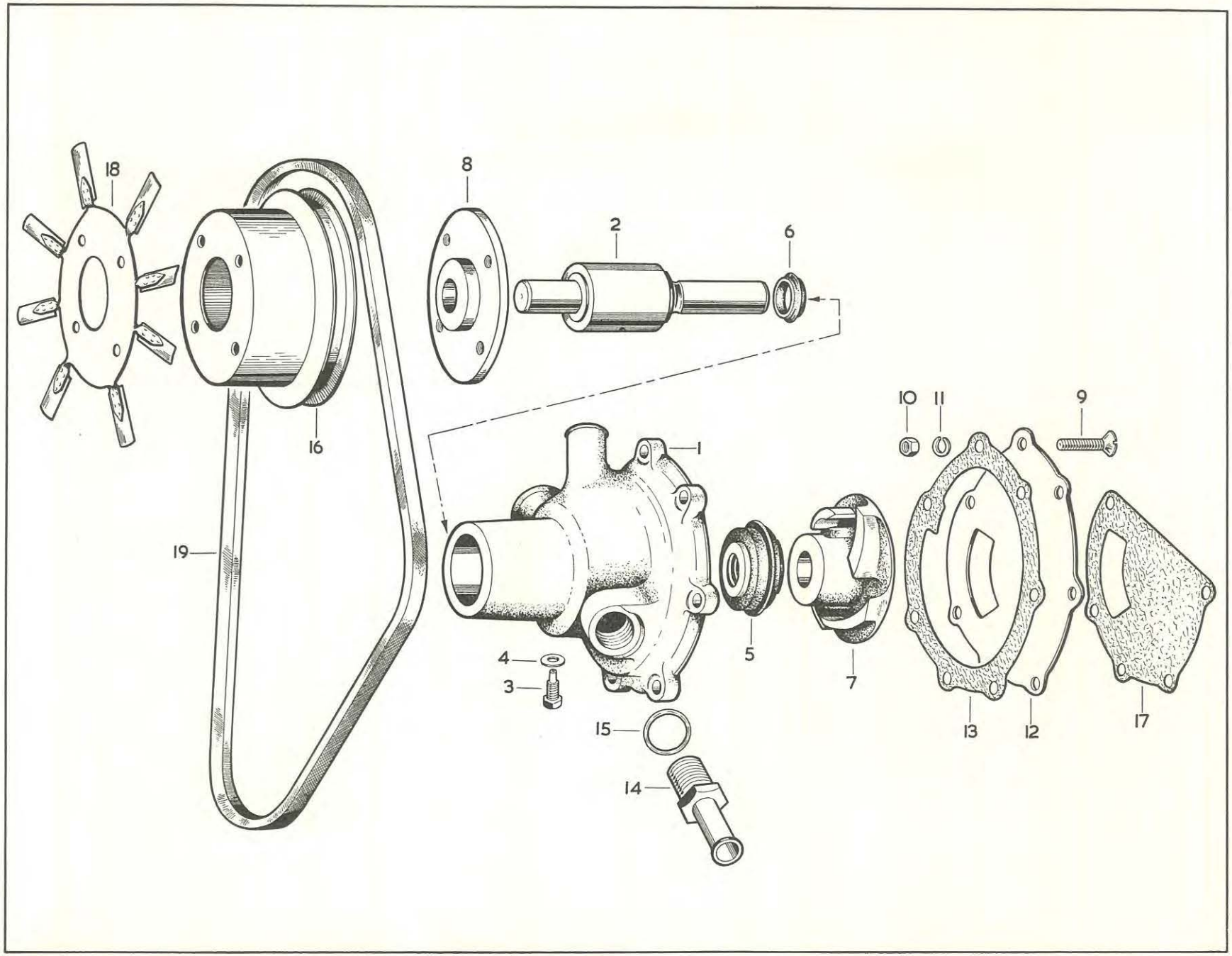

PLATE 5

CYLINDER HEAD

Part No.	Description	Plate No.	No. per Unit	Remarks
135948	**CYLINDER HEAD**	6—1	1	
307842	**Core Plug** (Front and Rear)		2	
307873	**Core Plug** (Top)		5	
414832	**Core Plug** (Bottom)		8	
424978	**Plug,** Screwed, Rear		1	
424977	**Water Jet**		6	
430709	**Insert,** for Inlet Valve		6	
430710	**Insert,** for Exhaust Valve		6	
427356	**Guide,** for Inlet Valve		6	
437357	**Guide,** for Exhaust Valve		6	
34005/14	**Stud,** for Exhaust and Induction Manifolds		16	
34006/32	**Stud,** for Rocker Shaft Bracket		12	
34005/30	**Stud,** for Thermostat Body		2	
13105	**Nut,** for Exhaust and Induction Manifolds		16	
422500/02	**Washer,** Plain, on Studs		16	
	Palnut ($\frac{5}{16}$" × 24 U.N.F.)		16	
13106	**Nut,** on Rocker Shaft Stud		8	
401912	**Tab Washer,** for Nuts (Front and Intermediate)		5	
401913	**Tab Washer,** for Nut (Rear)		1	
422803	**Adaptor,** for Cylinder Head Top Cover Stud		4	
13105	**Nut,** for Thermostat Body		2	
430241/05	**Washer,** Spring, under Nut		2	
134683	**Gasket,** between Cylinder Block and Cylinder Head	6—2	1	
305485	**INLET VALVE**	6—3	6	
305486	**EXHAUST VALVE**	6—4	6	
303991	**VALVE SPRING, INNER**	6—5	12	
303992	**VALVE SPRING, OUTER**	6—6	12	
427361	**Seat Washer,** for Valve Springs	6—7	12	
424983	**Collar,** at Top of Valve Springs	6—8	12	
422784	**Split Cone** (two halves), for Valves	6—9	12	

CYLINDER HEAD

Part No.	Description	Plate No.	No. per Unit	Remarks
419888	**ROCKER SHAFT AND PLUG**	6—10	1	
425830	**Bracket,** for Rocker Shaft (Front and Intermediate)	6—11	5	
425831	**Bracket,** for Rocker Shaft (Rear)	6—12	1	
425833	**Locating Screw,** in Rear Rocker Shaft Bracket	6—13	1	
422827	**VALVE ROCKER, FRONT**	6—14	6	
422826	**VALVE ROCKER, REAR**	6—15	6	
420136	**Adjusting Ball,** for Valve Rocker	6—16	12	
13105	**Nut,** for locking adjusting Ball	6—17	12	
401655	**Spring,** for locating Rockers	6—18	5	
425966	**Washer,** Plain, on Rocker Shaft		26	
401654	**Spring Plate** (End Location)	6—19	2	
422501/25	**Split Pin,** for Rocker Shaft End		2	
305852	**INDUCTION MANIFOLD**	6—20	1	
34005/14	**Stud,** securing Carburetters		8	
13105	**Nut,** on Carburetter Studs		8	
C.11820/3	**Palnut** ($\frac{5}{16}$" × 24 U.N.F.)		8	
431285/01	**Drain Plug,** for Induction Manifold		1	
422506/05	**Washer,** on Plug		1	
420567	**Rear Cover,** for Induction Manifold	6—21	1	
405570	**Gasket,** between Rear Cover and Induction Manifold	6—22	1	
22105/06	**Screw,** Set, securing Rear Cover		3	
430241/05	**Washer,** Spring, on Setscrews		3	
133436	**EXHAUST MANIFOLD, FRONT**	6—23	1	
133437	**EXHAUST MANIFOLD, REAR**	6—24	1	
427758	**Gasket,** between Exhaust and Induction Manifold (Front)	6—25	1	
305743	**Gasket,** between Exhaust and Induction Manifold (Centre)	6—26	1	
427753	**Gasket,** between Exhaust and Induction Manifold (Rear)	6—27	1	

Part No.	Description	Plate No.	No. per Unit	Remarks
304802	**WATER PIPE FROM THERMOSTAT BODY TO INDUCTION MANIFOLD AND INDUCTION MANIFOLD TO WATER PUMP**	6—28	1	
22105/07	**Screw,** Set, securing Water Pipe		3	
420241/05	**Washer,** Spring, on Setscrew		3	
405570	**Gasket,** between Water Pipe and Induction Manifold	6—29	1	
425931	**Hose,** from Thermostat Body to Water Pipe and Water Pump	6—30	2	
423176/08	**Clip,** for Hose	6—31	4	
424832	**Clip,** for Thermometer Capillary Tube		3	
304358	**THERMOSTAT UNIT, IN WATER OUTLET PIPE (OPENING TEMPERATURE 170° TO 190° F.) (1572115)**	6—32	1	
134552	**THERMOSTAT BODY**	6—33	1	**Fitted to DF.316/7**
136396	**THERMOSTAT BODY**		1	**Fitted to DF.318/9**
419858	**Gasket,** between Cylinder Head and Thermostat Body	6—34	1	
307393	**WATER OUTLET ELBOW, FROM THERMOSTAT BODY**	6—35	1	
422718	**Gasket,** between Water Outlet Elbow and Thermostat Body	6—36	1	
22105/08	**Screw,** Set, securing Water Outlet Elbow to Body		2	
430241/05	**Washer,** Spring, on Setscrew		2	
133428	**COVER FOR CYLINDER HEAD**	6—37	1	
307247	**Gasket,** between Cylinder Head and Cover	6—38	1	
425026	**Oil Filler Cap,** for Cover	6—39	1	
425652	**Screw,** securing Cover to Cylinder Head		4	
403619	**Washer** (Rubber), on Screw		4	
401288	**Retainer,** for Rubber Washer		4	

CYLINDER HEAD

Part No.	Description	Plate No.	No. per Unit	Remarks
430049	**SPARKING PLUG (LODGE G.L.N.H.)**		6	
428933	**Cap,** Weatherproof (M.180)		6	
308533	**LOW TENSION CABLE FROM COIL TO DISTRIBUTOR**		1	
403303	**HIGH TENSION LEAD FROM COIL TO DISTRIBUTOR**		1	
	HIGH TENSION SPARKING PLUG LEADS		1	
416630	**Lead,** to No. 1 Sparking Plug		1	
416629	**Lead,** to No. 2 Sparking Plug		1	
416638	**Lead,** to No. 3 Sparking Plug		1	
416615	**Lead,** to No. 4 Sparking Plug		1	
416608	**Lead,** to No. 5 Sparking Plug		1	
416606	**Lead,** to No. 6 Sparking Plug		1	
422599	**RUBBER RING SECURING HIGH TENSION LEADS**		1	
422491	**CLIP AND GROMMET ASSEMBLY RETAINING 3 FORWARD LEADS**		1	
422483	**Clip,** securing Leads to Cylinder Block		1	
422490	**Grommet,** in Clip		1	

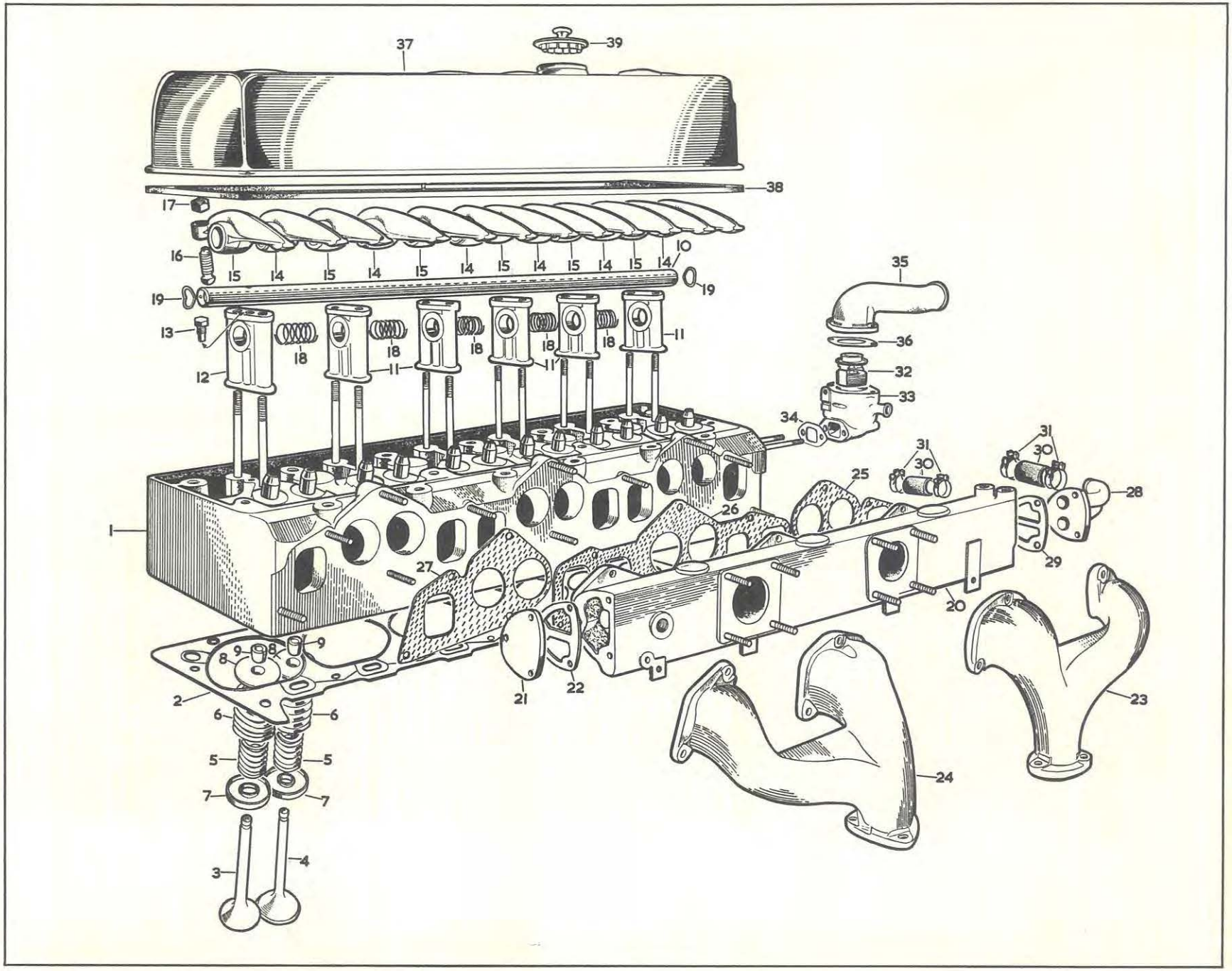
37
39
38
17
16
15
14
10
19
13
18
11
12
35
36
32
33
34
31
30
25
26
28
29
1
27
20
9
8
2
6
5
7
3
4
21
22
23
24

PLATE 6

CARBURETTERS

Part No.	Description	Plate No.	No. per Unit	Remarks
135958	**CARBURETTER COMPLETE (S.U. TYPE H.D.6) (AUC.891)**		1 pair	
135958/01	**Body,** for Front Carburetter (AUC.8249)		1	
135958/02	**Body,** for Rear Carburetter (AUC.8250)	7—1	1	
7090	**Adaptor,** for Automatic Ignition Advance, Rear Carburetter (AUC.2044)	7—2	1	
7091	**Gasket,** between Adaptor and Carburetter (AUC.2014)	7—3	1	
5618	**Screw,** securing Adaptor (AUC.2175)		2	
7106	**Union,** securing Ignition Suction Pipe (AUC.4490)	7—4	1	
7069	**Suction Chamber Assembly,** comprising Suction Chamber and Piston (AUC.8073)	7—5	2	
6961	**Damper Assembly,** in Suction Chamber (AUC.8102)	7—6	2	
7095	**Washer,** for Damper (AUC.4900)	7—7	2	
7094	**Spring,** assisting return of Piston (AUC.4387)	7—8	2	
7038	**Skid Washer,** under Spring at bottom of Piston (AUC.3071)	7—9	2	
7096	**Screw,** securing Suction Chamber to Carburetter (AUC.2175)		6	
135958/05	**Jet Needle** (5.P.)	7—10	2	
6957	**Jet Assembly,** comprising Jet Unit with Diaphragm and Cup (AUC.8155)	7—11	2	
6958	**Jet Bearing** (AUC.2001)	7—12	2	
6959	**Nut,** locking Jet (AUC.2002)	7—13	2	
6960	**Spring,** under Diaphragm (2006)	7—14	2	
135060/12	**Housing Assembly,** for Jet Unit—Front Carburetter (AUC.8146)		1	
135060/20	**Housing Assembly,** for Jet Unit—Rear Carburettor (AUC.8147)	7—15	1	
6993	**Float Chamber Assembly** (AUC.2009)	7—16	2	
7115	**Bolt,** securing Float Chamber and Jet Housing to Carburetter (AUC.2110)		8	
7105	**Washer,** Shakeproof, on Bolt (AUA.4643)		8	
7117	**Lid,** for Float Chamber on Front Carburetter (AUC.4261)		1	
7116	**Lid,** for Float Chamber on Rear Carburetter (AUC.4260)	7—17	1	
1090	**Float** (AUC.1123)	7—18	2	
135060/43	**Needle and Seat,** controlling Petrol Flow to Float Chamber (AUC.1121/1936)	7—19	2	
7118	**Hinged Lever,** for Float (AUC.1980)	7—20	2	
1153	**Knurled Pin,** securing Lever to Float Chamber Lid (AUC.1152)	7—21	2	
7119	**Gasket,** under Float Chamber Lid (AUC.1147)	7—22	2	
5832	**Cap Nut,** for Float Chamber (AUC.1867)	7—23	2	
1298	**Serrated Washer** (Fibre), on Cap Nut adjacent to Lid (AUC.1928)	7—24	2	
7120	**Washer** (Alum.), on Cap Nut (AUC.1557)	7—25	2	
479	**Filter,** in Inlet Connection on Float Chamber Lid (AUC.2139)	7—26	2	
133438/72	**Banjo** (double ended), securing Feed Pipe to Float Chamber Lid—Front Carburetter (AUC.1832)		1	
133438/73	**Banjo** (single ended), securing Feed Pipe to Float Chamber Lid—Rear Carburetter (AUC.1833)	7—27	1	
C.11488	**Banjo Bolt,** securing Banjo to Float Chamber Lid (AUC.2698)	7—28	2	
C.11489	**Washer** (Fibre), on Banjo Bolt (AUC.2141)	7—29	4	
135060/22	**Sliding Rod** (AUC.2018)	7—30	2	
8760	**Spring,** on Sliding Rod (AUC.2020)	7—31	2	
135060/25	**Cam Shoe,** at Base of Sliding Rod (AUC.2031)	7—32	2	
8761	**Plate,** at top of Sliding Rod (AUC.2019)	7—33	2	
135060/26	**Screw,** for Sliding Rod (AUC.2024)	7—34	4	
134640/05	**Stop Screw,** for Top Plate (AUC.3464)	7—35	2	
7049	**Spring,** securing Stop Screw (AUC.2451)	7—36	2	
6967	**Valve,** for Slow Running Adjustment (AUC.2028)	7—37	2	
6966	**Spring,** for Slow Run Valve (AUC.2027)	7—38	2	
6968	**Gland Washer** (Neoprene) on Slow Run Valve (AUC.2029)	7—39	2	
6969	**Dished Washer** (Brass), at top of Gland Washer (AUC.2030)	7—40	2	
134640/03	**Throttle Spindle,** for Front Carburetter (AUC.4889)		1	
135996/03	**Throttle Spindle,** for Rear Carburetter (AUC.4767)		1	
1730	**Throttle Disc** (Butterfly) (AUC.3280)		2	

Part No.	Description	Plate No.	No. per Unit	Remarks
	CARBURETTER COMPLETE (S.U. TYPE H.D.6) (AUC.891) *(continued)*			
7046	**Screw,** securing Throttle Disc to Spindle (AUC.1358)		4	
6962	**Gland Washer** (Brass), on Throttle Spindle (AUC.2096)		4	
6964	**Gland Washer** (Langite), in Throttle Spindle (AUC.2098)		4	
6963	**Spring,** for Gland (AUC.2097)		4	
6965	**Retainer Cap,** for Spring (AUC.2010)		4	
135060/30	**Stop,** for Throttle (AUC.2022)		2	
7050	**Taper Pin,** securing Stop to Throttle Spindle (AUC.2106)		2	
135958/04	**CONNECTING SHAFT BETWEEN CARBURETTERS (AUC.2393)**	7—41	1	
4833	**COUPLING BETWEEN CONNECTING SHAFT AND CARBURETTER SPINDLES (AUC.4334)**	7—42	2	
5801	**Bolt,** securing Coupling to Shaft and Spindles (AUC.2669)		4	
673	**Nut,** on Bolt (AUC.2673)		4	
4812	**Washer,** under Nuts (AUC.4612)		4	
428184	**LEVER ON THROTTLE SPINDLE—REAR CARBURETTER**	7—43	1	
426933/35	**Screw,** Set, securing Lever to Throttle Spindle		1	
426935/4	**Nut,** on Setscrew		1	
430241/03	**Washer,** Spring, on Setscrew		1	
427458/02	**Ball Pin,** in Throttle Lever	7—44	1	
422543/2	**Nut,** on Ball Pin		1	
430241/03	**Washer,** Spring, on Ball Pin		1	
426903	**INSULATOR BETWEEN CARBURETTERS AND INLET MANIFOLD**	7—45	2	
135060/45	**OVERFLOW PIPE COMPLETE (AUC.5022)**	7—46	2	

CARBURETTERS

Part No.	Description	Plate No.	No. per Unit	Remarks
135372	**SUCTION PIPE FROM FRONT CARBURETTER TO DISTRIBUTOR VACUUM CONTROL**	7—47	1	
422519/01	**Nipple,** on Suction Pipe		2	
422520/01	**Union Nut,** securing Suction Pipe to Carburetter and Vacuum Control		2	
431393	**Clip,** securing Suction Pipe to Cylinder Head	7—48	1	
22105/04	**Screw,** Set, securing Clip		1	
430241/05	**Washer,** Spring, on Setscrews		1	
306127	**PETROL PIPE ASSEMBLY LINKING CARBURETTERS**	7—49	1	
422519/06	**Nipple,** on Petrol Pipe		2	
422520/04	**Union Nut,** securing Petrol Pipe to Carburetter		2	
135373	**PETROL PIPE ASSEMBLY FROM FRONT CARBURETTER TO PETROL PUMP**	7—50	1	
422519/06	**Nipple,** on Petrol Pipe		1	
422520/04	**Union Nut,** securing Petrol Pipe to Carburetter		1	
422890	**Olive,** on Petrol Pipe		1	
422786	**Union Nut,** securing Petrol Pipe to Petrol Pump		1	
426578	**Clip,** securing Petrol Pipe to Thermostat Cover	7—51	1	
430762	**THROTTLE SPRING CARRIER—UPPER**	7—52	1	
430763	**THROTTLE SPRING CARRIER—LOWER**	7—53	1	
427463	**Pin,** for Throttle Spring Carrier	7—54	2	
427461	**Washer,** on Pin		2	
422501/02	**Split Pin**		2	

Part No.	Description	Plate No.	No. per Unit	Remarks
430764	**THROTTLE SPRING**	7—55	1	
430765	**BELL CRANK LEVER AND BUSH COMPLETE**	7—56	1	
0608/08	**Bush,** inside Lever		2	
431550	**Pivot Pin,** securing Lever	7—57	1	
13304	**Nut,** slotted, on Pivot Pin		1	
422500/01	**Washer,** plain, on Pivot Pin		1	
422501/04	**Split Pin,** securing Nut		1	
424813	**Ball Pin,** in Bell Crank Lever	7—58	1	
422543/2	**Nut,** securing Ball Pin to Bell Crank Lever		1	
430241/03	**Washer,** Spring, on Ball Pin		1	
307596	**BELL CRANK LEVER BRACKET**	7—59	1	
22105/05	**Screw,** Set, securing Bracket to Engine		1	
430241/05	**Washer,** Spring, on Set Screw		1	
430235	**KICKDOWN LEVER AND BUSH COMPLETE**	7—60	1	
1012/08	**Bush,** inside Lever		2	
424813	**Ball Pin,** for Kickdown Lever	7—61	2	
422543/2	**Nut,** securing Ball Pin to Kickdown Lever		2	
430241/03	**Washer,** Spring, on Ball Pin		2	
430229	**THROTTLE RELAY SPRING**	7—62	1	
420966/6	**THROTTLE CONTROL ROD CONNECTING KICKDOWN LEVER TO THROTTLE SPINDLE LEVER**	7—63	1	
424822	**Ball Socket,** for Throttle Control Rod	7—64	2	
422543/2	**Nut,** securing Ball Socket to Control Rod	7—65	2	

Part No.	Description	Plate No.	No. per Unit	Remarks
135060/28	**CONNECTING ROD FOR HAND CONTROL LEVER (AUC.2860)**	7—66	1	
8755	**Fork End,** on Connecting Rod (AUC.2256)	7—67	2	
5614	**Nut,** securing Fork End (AUC.2156)	7—68	2	
5511	**Clevis Pin,** for Fork Ends (AUC.2108)		2	
432548	**Ball End,** on Mixture Control Lever		1	
422543/2	**Nut,** securing Ball End		1	
430241/03	**Washer,** Spring, under Nut		1	
135961	**SHIELD FOR CARBURETTERS**	7—69	1	
22105/05	**Screw,** Set, securing Shield to Manifold		2	
422500/02	**Washer** (Plain), on Setscrew		2	

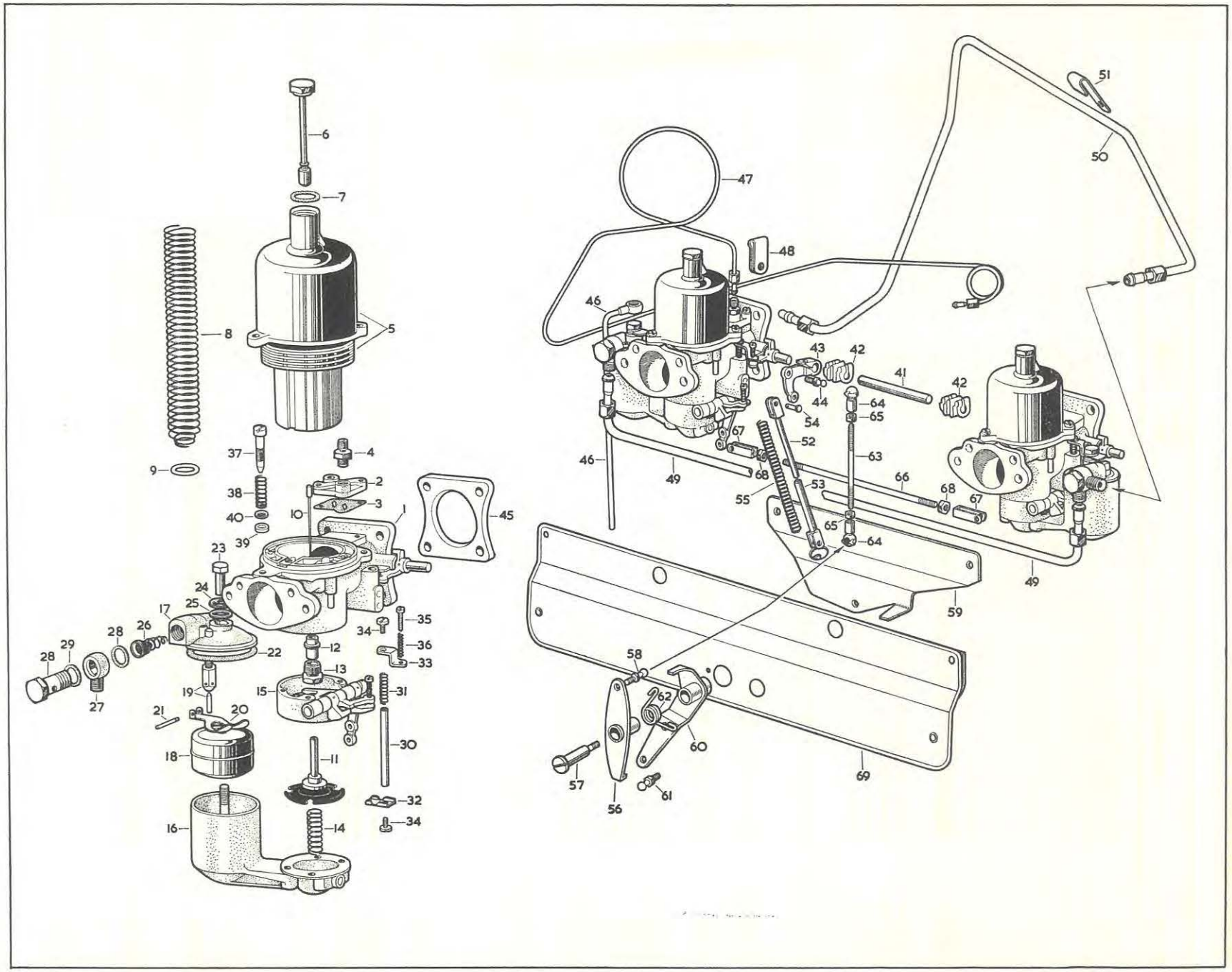
1
2
3
4
5
6
7
8
9
10
11
12
13
14
15
16
17
18
19
20
21
22
23
24
25
26
27
28
29
30
31
32
33
34
35
36
37
38
39
40
41
42
43
44
45
46
47
48
49
50
51
52
53
54
55
56
57
58
59
60
61
62
63
64
65
66
67
68
69

PLATE 7

AIR SILENCER HOME MODELS ONLY

Part No.	Description	Plate No.	No. per Unit	Remarks
135056	**AIR SILENCER (7223129)**	8—1	1	
306149	**BRACKET FOR AIR SILENCER**	8—2	1	
12104/04	**Screw,** Set, securing Bracket to Air Silencer		2	
430241/04	**Washer** (Spring), on Setscrews		2	
22105/05	**Screw,** Set, securing Bracket to Induction Manifold		1	
422540/05	**Washer** (D.C. Spring), on Setscrew		1	
427392	**STAY FOR AIR SILENCER**	8—3	1	
22105/05	**Screw,** Set, securing Stay to Induction Manifold		2	
422540/05	**Washer** (D.C. Spring), on Setscrew		2	
305585	**Breather Pipe**	8—4	1	
427446	**Grommet,** for Breather Pipe	8—5	1	
423176/06	**Clip,** securing Breather Pipe	8—6	1	
12104/04	**Screw,** Set, securing Breather Pipe to Top Cover		2	
430241/04	**Washer** (Spring), on Setscrew		2	
134639	**AIR INTAKE PIPE**	8—7	1	
423613	**Gasket,** between Air Intake Pipe and Carburetters	8—8	2	
22105/07	**Screw,** Set, securing Air Intake Pipe to Carburetter		4	
430241/05	**Washer** (Spring), on Setscrew		4	
428793	**HOSE CONNECTING AIR SILENCER TO AIR INTAKE PIPE**	8—9	1	
423176/45	**Clip,** securing Hose to Air Silencer and Air Intake Pipe	8—10	2	

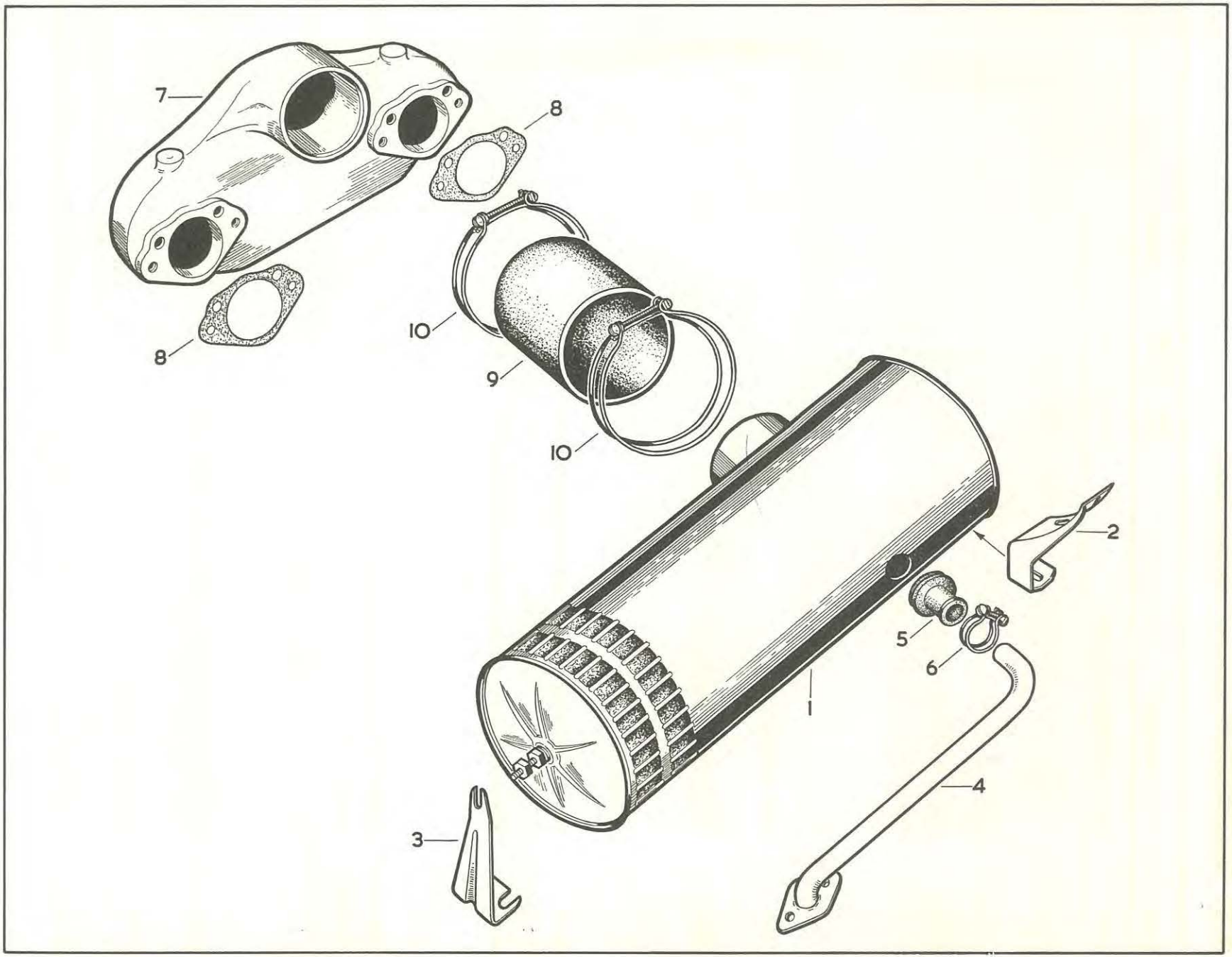

PLATE 8

AIR CLEANER EXPORT MODELS ONLY

Part No.	Description	Plate No.	No. per Unit	Remarks
136040	**AIR CLEANER (D.42411)**	9—1	1	
5903	**Element,** inside Air Cleaner (C.51551)	9—2	1	
FU.105/B	**Wing Nut,** securing End Cover		1	
C.781	**Washer** (Fibre), under Wing Nut		1	
22105/05	**Screw,** Set, securing Air Cleaner to Induction Manifold		3	
422540/05	**Washer** (D.C. Spring), on Setscrew		3	
431077	**Breather Pipe**	9—3	1	
426066	**Hose,** for Breather Pipe	9—4	1	
423176/06	**Clip,** for Breather Pipe Hose	9—5	2	
12104/04	**Screw,** Set, securing Breather Pipe		2	
430241/04	**Washer** (Spring), on Setscrew		2	
134639	**AIR INTAKE PIPE**	9—6	1	
423613	**Gasket,** between Air Intake Pipe and Carburetters	9—7	2	
22105/07	**Screw,** Set, securing Air Intake Pipe to Carburetter		4	
430241/05	**Washer** (Spring), on Setscrew		4	
428793	**HOSE CONNECTING AIR CLEANER TO AIR INTAKE PIPE**	9—8	1	
423176/45	**Clip,** securing Hose to Air Cleaner and Air Intake Pipe	9—9	2	

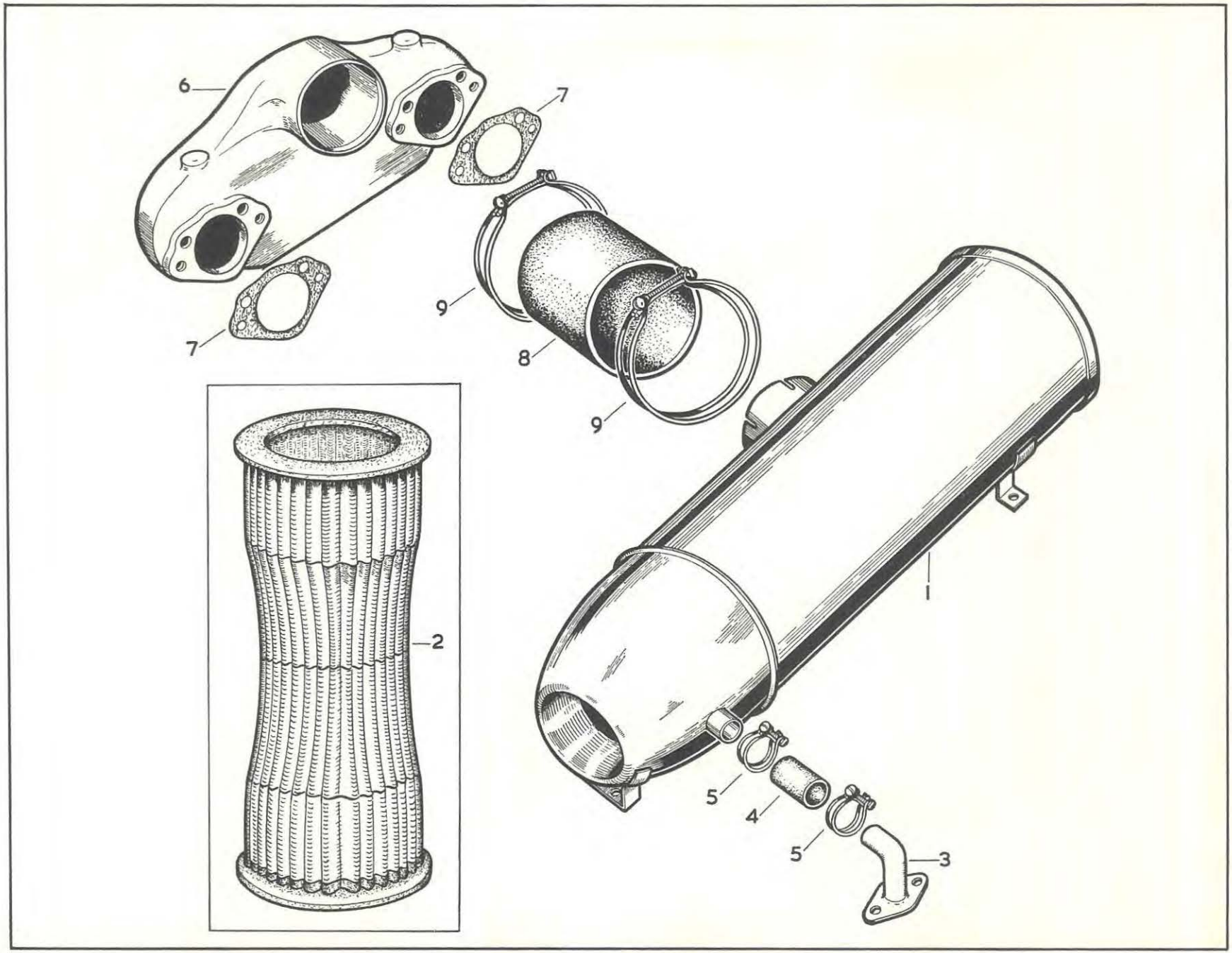

PLATE 9

(R.H. DRIVE CARS ONLY) ACCELERATOR CONTROLS

Part No.	Description	Plate No.	No. per Unit	Remarks
424987	**ACCELERATOR PEDAL ASSEMBLY**	10—1	1	
0608/16	**Bearing Bush**		1	
420965	**Ball Pin,** in Accelerator Pedal	10—2	1	
13104	**Nut,** securing Ball Pin to Pedal		1	
430241/04	**Washer,** Spring, securing Ball Pin		1	
285661	**BRACKET MOUNTING ACCELERATOR PEDAL**	10—3	1	
260340	**Spindle,** securing Accelerator Pedal to Bracket	10—4	1	
422524/14	**Pin,** Mills G.P.1. $\frac{1}{8}'' \times \frac{3}{4}''$, securing Spindle to Bracket	10—5	1	
428297	**Packing Block,** under Pedal Bracket		1	
423197/15	**Screw,** C/sk. Hd, securing Pedal Bracket to Floor		3	
420964/2	**ACCELERATOR PUSH ROD**	10—6	1	
420963	**Ball Socket,** for Push Rod Ends	10—7	2	
13104	**Nut,** securing Ball Socket at Lever End	10—8	1	
426346	**Draught Excluder,** on Accelerator Push Rod	10—9	1	
278800	**Ferrule,** for Draught Excluder	10—10	1	
307240	**THROTTLE CONTROL TUBE COMPLETE**	10—11	1	
0507/10	**Bush,** for Throttle Control Tube		2	
428249	**THROTTLE CONTROL SHAFT COMPLETE**	10—12	1	
424813	**Ball Pin,** in Throttle Control Lever	10—13	1	
422543/2	**Nut,** securing Pin to Lever		1	
430241/03	**Washer,** Spring, on Pin		1	
426301	**BRACKET FOR THROTTLE CONTROL SHAFT, R.H.**	10—14	1	

ACCELERATOR CONTROLS (R.H. DRIVE CARS ONLY)

Part No.	Description	Plate No.	No. per Unit	Remarks
428275	**BRACKET FOR THROTTLE CONTROL SHAFT, L.H.**	10—15	1	
12105/04	**Screw,** Set, securing Bracket to Dash		2	
430241/05	**Washer,** Spring, on Setscrews		2	
400542	**Spring,** positioning Control Tube between Brackets	10—16	1	
422500/02	**Washer,** Plain, between Shaft and Spring		1	
13104	**Nut,** securing Control Shaft within Brackets		2	
430241/04	**Washer,** Spring, on Shaft		2	
263226	**SPRING FOR THROTTLE RETURN**	10—17	1	
428838	**HORIZONTAL THROTTLE CONTROL ROD**	10—18	1	
278271	**Rubber Bush,** for Control Rod	10—19	1	
278679	**Sleeve,** inside Rubber Bush	10—20	1	
423311	**Distance Piece**	10—21	1	
422500/02	**Washer,** Plain		2	
422544/13	**Bolt,** securing Rubber Bush to Throttle Lever		1	
422543/2	**Nut,** on Bolt		2	
420963	**Ball Socket**	10—22	1	
13104	**Nut,** securing Ball Socket	10—23	1	
428180	**HORIZONTAL MIXTURE CONTROL ROD**	10—24	1	
278271	**Rubber Bush,** for Control Rod	10—25	1	
278679	**Sleeve,** inside Rubber Bush	10—26	1	
423311	**Distance Piece**	10—27	1	
422500/02	**Washer,** Plain		2	
422544/13	**Bolt,** securing Rubber Bush to Mixture Lever		1	
422543/2	**Nut,** on Bolt		2	
420963	**Ball Socket**	10—28	1	
13104	**Nut,** securing Ball Socket	10—29	1	
428258	**THROTTLE CONTROL LEVER COMPLETE**	10—30	1	
423303	**Fulcrum Pin,** securing Throttle Control Lever to Bracket	10—31	1	
422500/02	**Washer,** Plain, on each face of Lever		2	
423291	**Spring,** positioning Lever with Bracket	10—32	1	
430241/04	**Washer,** Spring, on Fulcrum Pin		1	
13104	**Nut,** securing Fulcrum Pin to Bracket		1	

ACCELERATOR CONTROLS

(R.H. DRIVE CARS ONLY)

Part No.	Description	Plate No.	No. per Unit	Remarks
428254	**SUPPORT BRACKET FOR MIXTURE CONTROL LEVER COMPLETE**	10—33	1	
405315	**Clip,** securing Cable to Support Bracket		1	
426933/34	**Setscrew,** securing Clip to Support Bracket		1	
426935/4	**Nut,** on Setscrew		1	
430241/03	**Washer,** Spring, on Setscrew		1	
12105/04	**Setscrew,** securing Support Bracket to Dash		2	
430241/05	**Washer,** Spring, on Setscrew		2	
428255	**MIXTURE CONTROL LEVER COMPLETE**	10—34	1	
428259	**Pivot Pin,** securing Mixture Control Lever, within Bracket	10—35	1	
422500/02	**Washer,** Plain, on Pivot Pin		1	
422501/05	**Split Pin,** securing Pivot Pin		1	
307759/01	**THROTTLE CONTROL CABLE (32557)**	10—36	1	
222/145	**Knob,** for Throttle Control Cable (marked ' T ')	10—37	1	
307759/01	**MIXTURE CONTROL CABLE (32557)**	10—38	1	
222/144	**Knob,** for Control Cable (marked ' M ')	10—39	1	
422542/62	**CONTROL ROD BETWEEN CARBURETTER KICKDOWN LEVER & BELL HOUSING KICKDOWN LEVER**	10—40	1	
420963	**Ball Socket** on Control Rod	10—41	2	
13104	**Nut,** securing Ball Socket	10—42	2	
307291	**L.H. KICKDOWN LEVER AND SPINDLE COMPLETE, ON BELL HOUSING**	10—43	1	

ACCELERATOR CONTROLS (R.H. DRIVE CARS ONLY)

Part No.	Description	Plate No.	No. per Unit	Remarks
430293	**R.H. KICKDOWN LEVER AND BUSH COMPLETE, ON BELL HOUSING**	10—44	1	
0608/16	**Bush,** for R.H. Kickdown Lever		1	
11104/08	**Bolt,** securing R.H. Kickdown Lever		1	
422514/05	**Nut,** Nyloc, on Bolt		1	
424813	**Ball Pin,** on Kickdown Levers	10—45	2	
422543/2	**Nut,** securing Ball Pins		2	
430241/03	**Washer,** Spring, under Nuts		2	
430316	**LEVER ASSEMBLY, HAND CONTROL**	10—46	1	
430310	**SPRING, HAND CONTROL LEVER**	10—47	1	
422542/29	**CONTROL ROD, BETWEEN KICK-DOWN LEVER AND GEARBOX LEVER**	10—48	1	
420963	**Ball Socket,** on Control Rod	10—49	2	
13104	**Nut,** securing Ball Socket	10—50	2	
424813	**Ball Pin,** on Gearbox Lever	10—51	1	
422543/2	**Nut,** securing Ball Pin		1	
430241/03	**Washer,** Spring, under Nut		1	

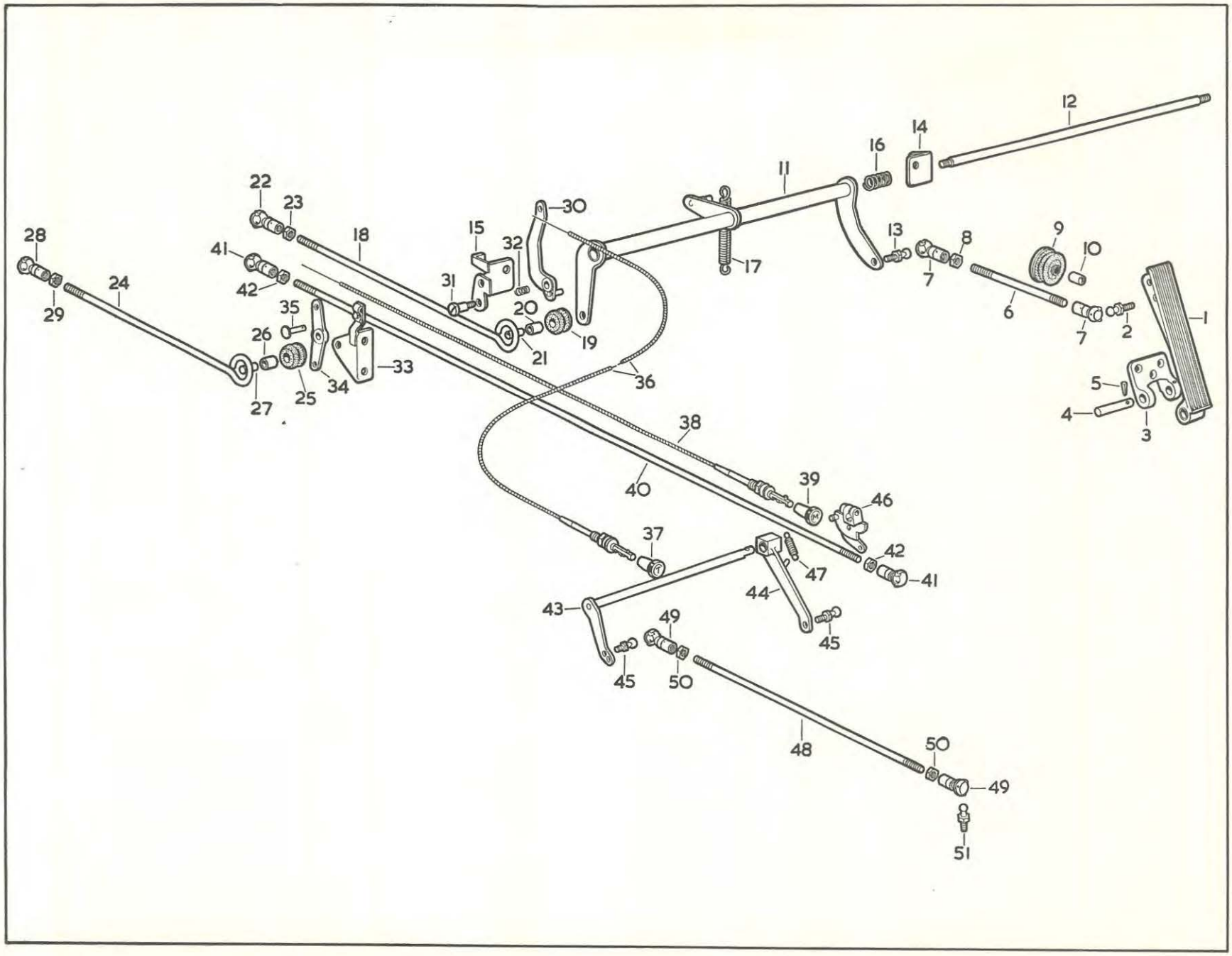
1
2
3
4
5
6
7
7
8
9
10
11
12
13
14
15
16
17
18
19
20
21
22
23
24
25
26
27
28
29
30
31
32
33
34
35
36
37
38
39
40
41
42
41
42
43
44
45
45
46
47
48
49
49
50
50
51

PLATE 10

(L.H. DRIVE CARS ONLY) ACCELERATOR CONTROLS

Part No.	Description	Plate No.	No. per Unit	Remarks
424987	**ACCELERATOR PEDAL ASSEMBLY**	11—1	1	
0608/16	**Bearing Bush**		1	
420965	**Ball Pin,** in Accelerator Pedal	11—2	1	
13104	**Nut,** securing Ball Pin to Pedal		1	
430241/04	**Washer,** Spring, under Nut		1	
285661	**BRACKET, MOUNTING ACCELERATOR PEDAL**	11—3	1	
260340	**Spindle,** securing Accelerator Pedal to Bracket	11—4	1	
422524/14	**Pin, Mills** G.R.1 $\frac{1}{8}''$ × $\frac{3}{4}''$ securing Spindle in Bracket	11—5	1	
428297	**Packing Block,** under Pedal Housing		1	
423197/15	**Screw,** C/sk. hd., securing Pedal Bracket to Floor		3	
420964	**ACCELERATOR PUSH ROD**	11—6	1	
420963	**Ball Socket,** for Push Rod Ends	11—7	2	
13104	**Nut,** securing Ball Socket at Lower End	11—8	1	
426346	**Draught Excluder,** on Accelerator Push Rod	11—9	1	
278800	**Ferrule,** for Draught Excluder	11—10	1	
307693	**THROTTLE CONTROL TUBE COMPLETE**	11—11	1	
0507/10	**Bush,** for Throttle Control Tube		2	
423292/1	**THROTTLE CONTROL SHAFT COMPLETE**	11—12	1	
424813	**Ball Pin,** in Throttle Control Lever	11—13	1	
422543/2	**Nut,** securing Pin to Lever		1	
430241/03	**Washer,** Spring, on Pin		1	
428978	**BRACKET FOR THROTTLE CONTROL SHAFT, R.H.**	11—14	1	

ACCELERATOR CONTROLS (L.H. DRIVE CARS ONLY)

Part No.	Description	Plate No.	No. per Unit	Remarks
430070	**BRACKET FOR THROTTLE CONTROL SHAFT, L.H.**	11—15	1	
12105/04	**Screw,** Set, securing Bracket to Dash		2	
430241/05	**Washer,** Spring, on Setscrew		2	
400542	**Spring,** Positioning Control Tube between Bracket	11—16	1	
422500/02	**Washer,** Spring, between Shaft and Spring		1	
13104	**Nut,** securing Control Shaft, within Bracket		2	
430241/04	**Washer,** Spring, on Shaft		2	
263226	**SPRING FOR THROTTLE RETURN**	11—17	1	
428838	**HORIZONTAL THROTTLE CONTROL ROD**	11—18	1	
278271	**Rubber Bush,** for Control Rod	11—19	1	
278679	**Sleeve,** inside Rubber Bush	11—20	1	
423311	**Distance Piece**	11—21	1	
422500/02	**Washer,** Plain		2	
422544/13	**Bolt,** securing Rubber Bush to Throttle Lever		1	
422543/2	**Nut,** on Bolt		2	
420963	**Ball Socket**	11—22	1	
13104	**Nut,** securing Ball Socket	11—23	1	
428180	**HORIZONTAL MIXTURE CONTROL ROD**	11—24	1	
278271	**Rubber Bush,** for Control Rod	11—25	1	
278679	**Sleeve,** inside Rubber Bush	11—26	1	
423311	**Distance Piece**	11—27	1	
422500/02	**Washer,** Plain		2	
422544/13	**Bolt,** securing Rubber Bush to Mixture Lever		1	
422543/2	**Nut,** on Bolt		2	
420963	**Ball Socket**	11—28	1	
13104	**Nut,** securing Ball Socket	11—29	1	
428258	**THROTTLE CONTROL LEVER COMPLETE**	11—30	1	
423303	**Fulcrum Pin,** securing Throttle Control Lever to Bracket	11—31	1	
422500/02	**Washer,** Plain, on each face of Lever		2	
423291	**Spring,** positioning Lever with Bracket	11—32	1	
430241/04	**Washer,** Spring, on Fulcrum Pin		1	
13104	**Nut,** securing Fulcrum Pin to Bracket		1	

(L.H. DRIVE CARS ONLY) ACCELERATOR CONTROLS

Part No.	Description	Plate No.	No. per Unit	Remarks
428254	**SUPPORT BRACKET FOR MIXTURE CONTROL LEVER COMPLETE**	11—33	1	
405315	**Clip,** securing Cable to Support Bracket		1	
426933/34	**Screw,** Set, securing Clip to Support Bracket		1	
426935/4	**Nut,** on Setscrew		1	
430241/03	**Washer,** Spring, on Setscrew		1	
12105/04	**Screw,** Set, securing Support Bracket to Dash		2	
430241/05	**Washer,** Spring, on Setscrew		2	
428255	**MIXTURE CONTROL LEVER COMPLETE**	11—34	1	
428259	**Pivot Pin,** securing Mixture Control Lever within Bracket	11—35	1	
422500/02	**Washer,** Plain, on Pivot Pin		1	
422501/05	**Split Pin,** securing Pivot Pin		1	
307759/04	**THROTTLE CONTROL CABLE**	11—36	1	
222/145	**Control Cable Knob** (' T ')	11—37	1	
307759/03	**MIXTURE CONTROL CABLE**	11—38	1	
222/144	**Control Cable Knob** (' M ')	11—39	1	
422542/62	**CONTROL ROD, BETWEEN CARBURETTER KICKDOWN LEVER AND BELL HOUSING KICKDOWN LEVER**	11—40	1	
420963	**Ball Socket,** on Control Rod	11—41	2	
13104	**Nut,** securing Ball Socket	11—42	2	
307291	**L.H. KICKDOWN LEVER AND SPINDLE COMPLETE ON BELL HOUSING**	11—43	1	

ACCELERATOR CONTROLS (L.H. DRIVE CARS ONLY)

Part No.	Description	Plate No.	No. per Unit	Remarks
430293	**R.H. KICKDOWN LEVER AND BUSH COMPLETE ON BELL HOUSING**	11—44	1	
0608/16	**Bush,** for R.H. Kickdown Lever		1	
11104/08	**Bolt,** securing R.H. Kickdown Lever		1	
422514/05	**Nut,** Nyloc, on Bolt		1	
424813	**Ball Pin,** on Kickdown Lever	11—45	2	
422543/2	**Nut,** securing Ball Pin		2	
430241/03	**Washer,** Spring under Nut		2	
430316	**LEVER ASSEMBLY, HAND CONTROL**	11—46	1	
430310	**SPRING, HAND CONTROL LEVER**	11—47	1	
422542/29	**CONTROL ROD, BETWEEN KICK-DOWN LEVER AND GEARBOX LEVER**	11—48	1	
420963	**Ball Socket,** on Control Rod	11—49	2	
13104	**Nut,** securing Ball Socket	11—50	2	
424813	**Ball Pin,** on Gearbox Lever	11—51	1	
422543/2	**Nut,** securing Ball Pin		1	
430241/03	**Washer,** Spring, under Nut		1	

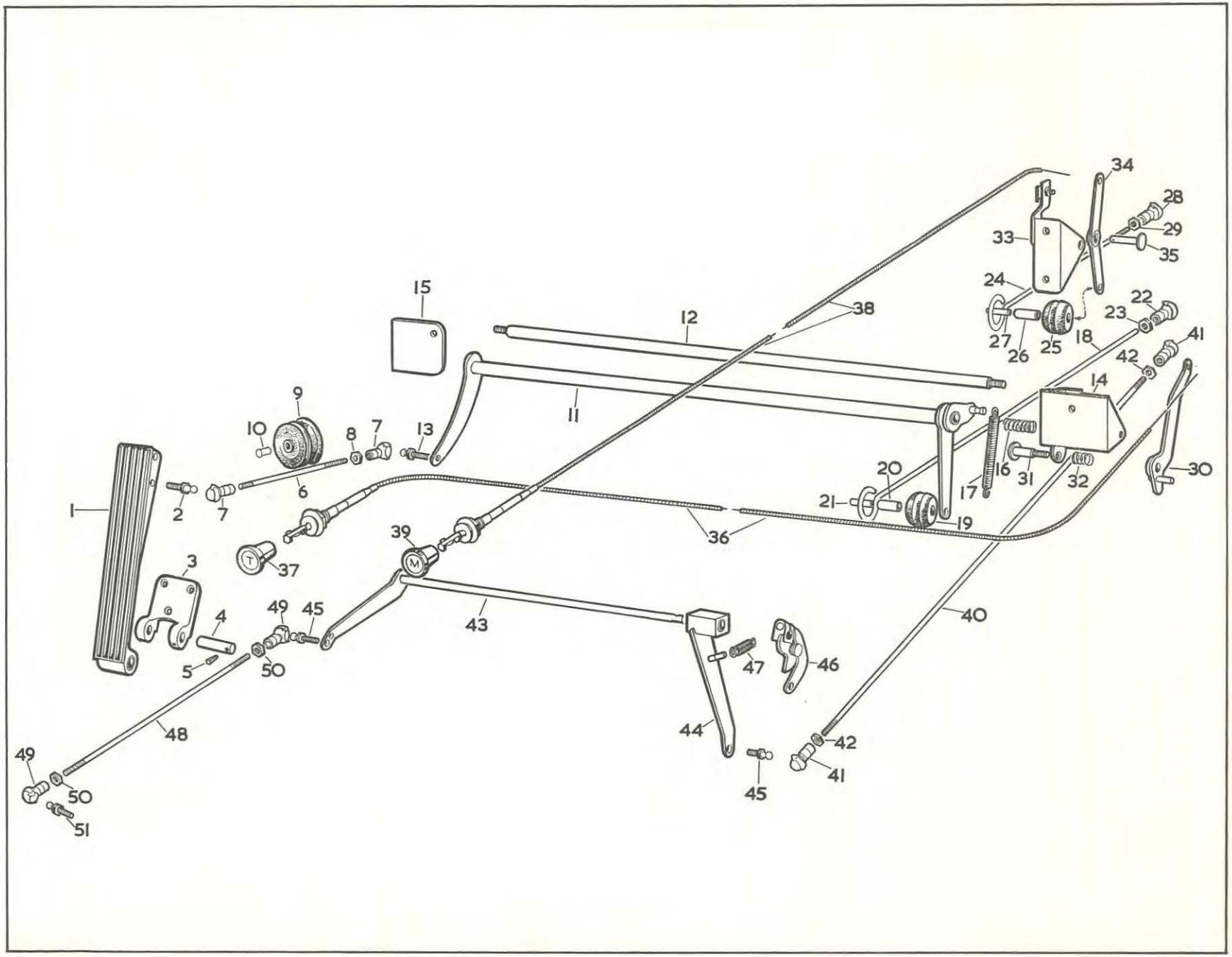
1
2
3
4
5
6
7
8
9
10
11
12
13
14
15
16
17
18
19
20
21
22
23
24
25
26
27
28
29
30
31
32
33
34
35
36
37
38
39
40
41
42
43
44
45
46
47
48
49
50
51

PLATE 11

AUTOMATIC TRANSMISSION UNIT

Part No.	Description	Plate No.	No. per Unit	Remarks
9379	**AUTOMATIC TRANSMISSION ASSEMBLY (MODEL DG.250/MJ) (20-058) LESS CONVERTER**		1	
C.10986	**CONVERTER ASSEMBLY (FC.15180/A)**		1	
8333	**Drain Plug,** for Converter (T.90012)		1	
8334	**Sealing Washer,** on Plug (T.90014)		1	
3701	**TRANSMISSION CASE ASSEMBLY (20-504-A)**	12—1	1	
3702	**Stud,** for Transmission Case (J20-506)		2	
7361	**Oil Seal,** for Selector Control Shaft (J.20-536/A)		1	
6761	**Plug** (Allen Head), under Transmission Case, for Pressure Take-off (JGM.444571)		2	
3740	**DIPSTICK ASSEMBLY (J.20-591)**	12—2	1	
6677	**SELECTOR CONTROL SHAFT ASSEMBLY (J.20-532/A)**	12—3	1	
6679	**Selector Lever,** inside Transmission Case (J.20-537/A)	12—4	1	
5455	**Washer,** $\frac{1}{2}$" Special, on Selector Shaft (J.20-538/B)	12—5	1	
6755	**Washer,** $\frac{5}{16}$" Plain, on Selector Shaft (JGM.103340)		1	
5908	**Washer,** $\frac{5}{16}$" lock, on Selector Shaft (JGM.103320)		1	
7002	**Nut,** $\frac{5}{16}$" securing Selector Lever to Control Shaft (JGM.103025)		1	
3750	**TOGGLE ARM LEVER (J.20-630)**	12—6	1	
3751	**Ring,** retaining Toggle Arm Lever in Transmission Case (I.20-633)	12—7	1	

AUTOMATIC TRANSMISSION UNIT

Part No.	Description	Plate No.	No. per Unit	Remarks
3755	**ROD ASSEMBLY, ACTUATING PARKING BRAKE FROM SELECTOR CONTROL SHAFT TO TOGGLE ARM LEVER (J.20-6441)**	12—8	1	
6772	**Swivel,** at bottom of Rod (J.20-645)	12—9	1	
6753	**Nut** (J.20-219701)	12—10	1	
3749	**INNER SERVO PISTON ASSEMBLY, $3\frac{1}{4}''$ DIAMETER (J.20-622)**	12—11	3	
5463	**OUTER SERVO PISTON ASSEMBLY, $3\frac{1}{4}''$ DIAMETER (J.20-605/A)**	12—12	2	
3703	**Seal,** for Inner and Outer Servo Pistons (J.20-512)	12—13	5	
5449	**PLATE ASSEMBLY FOR REVERSE SERVO CYLINDER (J.20-519/B)**	12—14	1	
3625	**'O' Ring,** $\frac{1}{2}'' \times \frac{11}{16}'' \times \frac{3}{32}''$ on Reverse Cylinder Plate (J.20-120)	12—15	1	
5450	**Gasket,** for Front of Plate (J.20-523/A)	12—16	1	
5447	**Gasket,** for Rear of Plate (J.20-518/A)	12—17	1	
6828	**REVERSE SERVO CYLINDER (J.20-517/D)**	12—18	1	
8317	**Bolt,** $\frac{5}{16}'' \times 1''$, securing Servo Cylinder to Case (JGM.179818)		1	
8434	**Bolt,** $\frac{5}{16}'' \times 2\frac{3}{4}''$, securing Servo Cylinder to Case (JGM.179829)		3	
8433	**Bolt,** $\frac{5}{16}'' \times 2''$, securing Servo Cylinder to Case (JGM.179826)		2	
5908	**Washer,** $\frac{5}{16}''$ Spring, on Bolts (JGM.103320)		6	
5702	**Plug,** for Pressure Testing on Reverse Gear (J.20-1103)	12—19	1	
3742	**Washer** (Copper) on Plug (J.20-594)	12—20	1	
6761	**Plug,** for Testing Pressure in Converter (JGM.444571)	12—21	1	

AUTOMATIC TRANSMISSION UNIT

Part No.	Description	Plate No.	No. per Unit	Remarks
5451	**SERVO CYLINDER FOR LOW AND FORWARD LOCK-UP BANDS (J.20-525D)**	12—22	1	
8317	**Bolt,** $\frac{5}{16}''$ × 1″, securing Servo Cylinder to Transmission Case (JGM.178918)		4	
8433	**Bolt,** $\frac{5}{16}''$ × 2″, securing Servo Cylinder to Transmission Case (JGM.179826)		5	
5908	**Washer,** Spring, on Bolt (JGM.103320)		9	
5702	**Plug,** in Servo Cylinder for testing pressures on Low and Forward Bands (J.20-1103)	12—23	2	
3742	**Copper Washer,** on Plugs (J.20-594)	12—24	2	
5444	**PISTON ASSEMBLY FOR LOW LOCK-UP BAND (J.20-513/A)**	12—25	1	
3706	**Seal,** for Piston (J.20-516)	12—26	1	
5712	**PLATE ASSEMBLY FOR LOW BAND SERVO CYLINDER (J.20-5272)**	12—27	1	
3625	**'O' Ring,** $\frac{1}{2}''$ × $\frac{11}{16}''$ × $\frac{3}{32}''$ between Plate and Piston (J.20-120)	12—28	2	
5452	**Gasket,** between Plate and Servo Cylinder (J.20-526/A)	12—29	1	
6684	**Gasket,** between Plate and Transmission Case (J.20-5291)	12—30	1	
3738	**BRAKE BAND ASSEMBLY FOR LOW AND FORWARD GEARS (J.20-581/A) (COMPLETE WITH LININGS)**	12—31	2	
6869	**BRAKE BAND ASSEMBLY FOR REVERSE GEAR (J.20-588/A) (COMPLETE WITH LININGS)**	12—32	1	
3705	**Strut,** for Operation of Brake Bands (J.20-514)	12—33	3	
7528	**Screw,** for adjusting Low Band (J.20-5242)	12—34	1	
5453	**Screw,** for adjusting Forward and Reverse Band (J.20-531/A)	12—35	2	
5910	**Nut,** Locking Adjusting Screws (JGM.122295)	12—36	3	

AUTOMATIC TRANSMISSION UNIT

Part No.	Description	Plate No.	No. per Unit	Remarks
5406	**FRONT PUMP AND COLLECTOR RING ASSEMBLY (J.20-105/A)**	13—1	1	
3622	**Collector Ring Assembly** (J.20-108/B)		1	
3627	**Front Pump Assembly** (J.20-149)		1	
3624	**'O' Ring,** between Collector Ring and Pump Body ($5\frac{1}{2}'' \times 5\frac{3}{4}'' \times \frac{1}{8}''$) (J.20-119)	13—2	1	
3625	**'O' Ring,** on Centre of Collector Ring ($\frac{1}{2}'' \times \frac{11}{16}'' \times \frac{3}{32}''$) (J.20-120)	13—3	1	
3622	**COLLECTOR RING ASSEMBLY (J.20-108/B)**	13—4	1	
3626	**Gasket,** behind Collector Ring (J.20-121)	13—5	1	
3627	**FRONT PUMP BODY ASSEMBLY COMPLETE WITH GEARS (J.20-149)**	13—6	1	
3623	**Oil Seal,** at Front End of Pump (J.20-116)		1	
3810	**Bolt,** $\frac{1}{4}'' \times 1\frac{3}{4}''$, securing Front Pump to Collector Ring (J.20-1102)		1	
8426	**Washer,** $\frac{1}{4}''$ Spring, on Bolt (JGM.103319)		1	
8430	**Bolt,** $\frac{5}{16}'' \times \frac{7}{8}''$ securing Front Pump to Collector Ring (JGM.179817)		2	
8432	**Bolt,** $\frac{5}{16}'' \times 1\frac{1}{2}''$ securing Front Pump to Collector Ring (JGM.179822)		2	
3677	**Thrust Washer,** Controlling End Float on Front Pump and Main Shaft (J.20-388)	13—7	1	**CHOOSE THRUST WASHER OF DESIRED THICKNESS TO MAINTAIN CORRECT END FLOAT**
3678	**Thrust Washer,** Controlling End Float on Front Pump and Mainshaft (J.20-388/A)	13—7	1	
3679	**Thrust Washer,** Controlling End Float on Front Pump and Mainshaft (J.20-388/B)	13—7	1	
3680	**Thrust Washer,** Controlling End Float on Front Pump and Mainshaft (J.20-388/C)	13—7	1	
8429	**Bolt,** $\frac{5}{16}'' \times \frac{3}{4}''$ securing Collector Ring to Transmission Case (JGM.179816)		4	
8431	**Bolt,** $\frac{5}{16}'' \times 1\frac{1}{4}''$ securing Collector Ring to Transmission Case (JGM.179820)		3	
5908	**Washer,** $\frac{5}{16}''$ Spring, on Bolt (JGM.103320)		7	
9380	**MAINSHAFT ASSEMBLY COMPLETE WITH GEAR TRAIN (20-30114)**		1	
C.6919	**Tube,** in End of Mainshaft for Oil Transfer (J.20-392)	13—8	1	

Part No.	Description	Plate No.	No. per Unit	Remarks
3631	**MAINSHAFT ASSEMBLY LESS GEAR TRAIN (J.20-305)**	13—9	1	
3695	**Piston Ring,** 1″ × $\frac{7}{64}$″ on Mainshaft for Front Planetary Carrier (J.20-413)	13—10	3	
5705	**REAR PLANETARY CARRIER ASSEMBLY (J.20-3152)**	13—11	1	
3699	**Washer,** for Rear Planetary Carrier (J.20-423)	13—12	1	
3637	**Thrust Washer,** for Sun Gear (J.20-321)	13—13	1	
3640	**Thrust Washer,** between Ring Gear and Planetary Carrier (J.20-325)	13—14	1	
3638	**Retainer,** securing Planetary Gears to Mainshaft (J.20-322)	13—15	1	
3691	**Piston Ring,** $1\frac{5}{8}$″ × $\frac{7}{64}$″, in Groove on Retainer (J.20-406)	13—16	1	
3639	**Snap Ring,** securing Retainer (J.20-323)	13—17	1	
5706	**REAR RING GEAR ASSEMBLY (J.20-3262)**	13—18	1	
3689	**'O' Ring,** $1\frac{1}{8}$″ × $1\frac{3}{4}$″ × $\frac{1}{8}$″, inside Ring Gear (J.20-401)	13—19	1	
3642	**Piston Ring,** $2\frac{3}{8}$″ × $\frac{7}{64}$″ at rear of Ring Gear (J.20-329/A)	13—20	1	
3690	**'O' Ring,** $\frac{5}{8}$″ × $1\frac{3}{4}$″ × $\frac{1}{16}$″, at rear of Ring Gear (J.20-402)	13—21	1	
3656	**Snap Ring,** on Splines of rear Ring Gear (J.20-352)	13—22	1	
5710	**REAR SUN GEAR ASSEMBLY (J.20-3693)**	13—23	1	
3670	**Retainer,** for Rear Sun Gear (J.20-381)	13—24	1	
3669	**Thrust Washer,** for Rear Sun Gear (J.20-380)	13—25	1	
5707	**FRONT SUN GEAR AND LOCK-UP DRUM ASSEMBLY (J.20-3302)**	13—26	1	
3648	**Piston Seal,** 3″ diameter (J.20-342)	13—27	1	
3696	**Ring,** for First Clutch Piston (J.20-414)	13—28	1	
3700	**Piston,** complete with Ring for First Clutch Piston (J.20-424)	13—29	1	
3685	**Plate Assembly,** for First Clutch Retractor (J.20-396)	13—30	1	
6768	**Spacer Plate** (J.20-3451)	13—31	1	
6683	**Plate,** between Friction Discs (J.20-3461)	13—32	5	
6676	**Friction Disc,** for First Clutch (J.20-3472)	13—33	4	
3653	**Retractor Spring,** operating Friction Discs (J.20-348)	13—34	12	
3697	**Retainer Assembly,** for first Clutch Plate (J.20-417)	13—35	1	
6764	**Snap Ring,** securing Clutch Plates to Lock-Up Drum (J.20-3501)	13—36	1	
5415	**Thrust Washer,** for Front Sun Gear (J.20-351/A)	13—37	1	

AUTOMATIC TRANSMISSION UNIT

Part No.	Description	Plate No.	No. per Unit	Remarks
5708	**FRONT PLANETARY CARRIER ASSEMBLY (J.20-3532)**		1	
6853	**Planetary Carrier only** (less Brake Drum) (J.20-3561)	13—38	1	
6619	**Reverse Brake Drum** (J.20-360/A)	13—39	1	
3692	**Snap Ring,** retaining Reverse Brake Drum (J.20-409)	13—40	1	
3660	**Thrust Washer,** for Front Planetary Carrier (J.20-362)	13—41	1	
5709	**FRONT RING GEAR ASSEMBLY (J.20-3632)**	13—42	1	
3691	**Piston Ring,** $1\frac{3}{8}''$ diameter × $\frac{7}{64}''$ for Front Ring Gear (J.20-406)	13—43	3	
5437	**FREE WHEEL UNIT AND LOCK-UP BRAKE DRUM PLATE ASSEMBLY FOR REVERSE GEAR (J.20-395/D)**		1	
5438	**Free Wheel Unit,** Short (J.20-398/D)	13—44	1	
5418	**Lock-Up Plate Assembly** (J.20-367/D)	13—45	1	
3665	**Roller,** positioning Brake Drum Plate to Centre Lock-Up Drum (J.20-373)	13—46	2	
3654	**Snap Ring,** securing Brake Drum Plate in Centre Lock-Up Drum (J.20-350)	13—47	1	
5436	**FREE WHEEL UNIT AND FORWARD BRAKE DRUM ASSEMBLY FOR FORWARD GEARS (J.20-3942)**		1	
7530	**Free Wheel Unit,** Medium (J.20-3891)	13—48	1	
5433	**Forward Brake Drum** (J.20-378/B)	13—49	1	
3667	**Snap Ring,** internal, securing Free Wheel Unit (J.20-376)	13—50	1	
5711	**Spacer,** behind Medium Free Wheel Unit (J.20-3751)	13—51	1	
3694	**Drive Pin,** retaining Spacer (J.20-411)	13—52	1	
3667	**Snap Ring,** securing Spacer (J.20-376)	13—53	1	
3672	**Bearing,** on Mainshaft behind Free Wheel Unit (J.20-383)	13—54	1	
3673	**Snap Ring,** on Mainshaft Bearing (J.20-384)	13—55	1	
3671	**Spacer,** behind Mainshaft Bearing (J.20-382)	13—56	1	
3693	**Gear,** on Mainshaft for Parking Brake (J.20-410)	13—57	1	
3674	**Spacer,** between Parking Gear and Bearing (J.20-385)	13—58	1	
3675	**Gear,** on Mainshaft for Governor Drive (J.20-386)	13—59	1	
3676	**Spacer,** behind Governor Drive Gear (J.20-387)	13—60	1	

AUTOMATIC TRANSMISSION UNIT

Part No.	Description	Plate No.	No. per Unit	Remarks
C.6867	**UNIVERSAL JOINT COMPANION FLANGE (J.20-093/A)**	13—61	1	
5439	**Washer,** for Flange (J.20-399/A)	13—62	1	
5926	**Nut,** Self-locking, securing Companion Flange (JGM.272672)	13—63	1	
7531	**VALVE BLOCK ASSEMBLY COMPLETE (J.20-54057)**		1	
6686	**Manifold Plate Assembly** (J.20-5412)		1	
6687	**Base Plate Assembly** (J.20-5461)	14—1	1	
6565	**Gasket,** between Base Plate and Manifold Plate (J.20-548/A)	14—2	1	
6870	**Relief Valve Body Assembly** (J.20-612/A)		1	
6564	**Gasket,** under Relief Valve Body (J.20-551/A)	14—3	1	
5915	**Ball,** $\frac{3}{8}''$ dia., for Relief Valve (JGM.147500)	14—4	2	
7368	**Body Assembly,** for Converter Valve (J.20-5602)		1	
7373	**Gasket,** for Converter Valve Body (J.20-5732)	14—5	1	
6851	**Bolt,** $\frac{1}{4}'' \times 2\frac{3}{8}''$, for Assembly of Valve Body (J.20-1104)		8	
8424	**Washer,** $\frac{1}{4}''$ Spring, on Bolt (J.20-5942)		8	
6757	**Bolt,** $\frac{5}{16}'' \times 1\frac{1}{8}''$, securing Valve Block to Transmission Case (JGM.106326)		7	
8423	**Washer,** $\frac{5}{16}''$ Spring, on Bolts (J.20-5941)		7	
6686	**MANIFOLD PLATE ASSEMBLY (J.20-5412)**	14—6	1	
3721	**Spring,** for Selector Valve Detent (J.20-544)	14—7	1	
5914	**Ball,** $\frac{1}{4}''$ diameter, for Selector Valve (JGM.147485)	14—8	1	
6870	**RELIEF VALVE BODY ASSEMBLY (J.20-612/A)**	14—9	1	
6680	**Retainer,** for Anti-Bump Valve Plug (J.20-570/A)	14—10	1	
6868	**Stop,** for Main Relief Valve (J.20-567/A)	14—11	1	
6682	**Retainer,** for Accumulator Spring (J.20-667)	14—12	1	
3732	**Retainer,** for Reverse Interlock Spring (J.20-570)	14—13	1	
7368	**CONVERTER VALVE BODY ASSEMBLY (J.20-5602)**	14—14	1	
7369	**Body only,** for Converter Valve (J.20-5612)		1	
6754	**Converter Shuttle Valve,** Direct (J.20-6381)	14—15	1	
6779	**Converter Shuttle Valve,** Reverse (J.20-6414)	14—16	1	
6999	**Sleeve,** for Converter Shuttle Valve (J.20-6431)	14—17	1	
6681	**Retainer,** for Shuttle Valve Sleeve (J.20-617/A)	14—18	1	

AUTOMATIC TRANSMISSION UNIT

Part No.	Description	Plate No.	No. per Unit	Remarks
6688	**OIL FILTER ASSEMBLY (J.20-5571)**	14—19	1	
6873	**Retainer,** for Oil Filter (J.20-558/B)	14—20	1	
6759	**Screw,** securing Retainer (JGM.113954)		1	
C.739	**Washer,** Shakeproof, on Screw (JGM.114604)		1	
5467	**OIL SUMP (J.20-649/A)**	14—21	1	
3737	**Plug,** in Oil Sump Drain Hole (J.20-580)	14—22	1	
3741	**Washer,** on Plug (J.20-592)	14—23	1	
3736	**Gasket,** between Oil Sump and Transmission Case (J.20-579)	14—24	1	
6757	**Bolt,** $\frac{5}{16}$" × $\frac{5}{8}$", securing Oil Sump to Transmission Case (JGM.106324)		14	
5908	**Washer,** $\frac{5}{16}$" Spring, on Bolt (JGM.103320)		14	
9381	**EXTENSION CASE ASSEMBLY COMPLETE (J20-7017)**		1	
9382	**Extension Case Assembly** (20-7045)	15—1	1	
3625	**'O' Ring,** on Bush for Governor Adjusting Shaft ($\frac{1}{2}$" × $\frac{11}{16}$" × $\frac{3}{32}$") (J.20-120)	15—2	1	
5469	**Pawl,** second Speed Drive (J.20-719/A)	15—3	1	
3764	**Washer,** for Control Link and Pawl (J.20-720)	15—4	2	
3765	**Rocker Arm,** for Governor Control (J.20-721)	15—5	1	
3767	**Washer,** behind Rocker Arm (J.20-723)		1	
5688	**Stop,** for Governor (J.20-722/A)	15—6	1	
3768	**Distance Piece,** behind Stop Plate (J.20-724)		1	
3769	**Spring,** operating Governor Control Rocker Arm (J.20-725)	15—7	1	
3808	**Shaft and Lever Assembly,** for Governor adjustment (J.20-836)	15—8	1	
3770	**Lever,** Governor Adjusting (J.20-728)	15—9	1	
3772	**Finger,** for Governor Adjusting Lever (J.20-736)	15—10	2	
3771	**Return Spring,** for Governor Adjusting Lever (J.20-735)	15—11	1	
3795	**Valve and Fork Assembly,** for Governor Control (J.20-790)	15—12	1	
3774	**Detent Piston,** for Governor Control Valve (J.20-744)	15—13	1	
8428	**Screw,** $\frac{1}{4}$" × $\frac{5}{8}$" securing Retaining Plate for Governor Fork (JGM.114354)		1	
8426	**Washer,** $\frac{1}{4}$" Spring, on Screw (JGM.103319)		1	
3796	**Plunger,** for Extension, operating Accelerator Detent (J.20-791)	15—14	1	
3797	**Spring,** tensioning Plungers (J.20-792)	15—15	1	
3798	**Gasket,** between Extension and Transmission Case (J.20-793)	15—16	1	
3762	**Oil Seal,** at End of Extension Case (J.20-716)	15—17	1	
8435	**Bolt,** $\frac{3}{8}$" × 1", securing Extension Case to Transmission Case (JGM.179839)		4	
5700	**Bolt,** $\frac{3}{8}$" × $2\frac{1}{4}$", securing Extension Case to Transmission Case (J.20-1100)		1	
5701	**Bolt,** $\frac{3}{8}$" × 3" securing Extension Case to Transmission Case (J.20-1101)		1	
8427	**Washer,** $\frac{3}{8}$" Spring, on Bolt (JGM.103321)		6	

Part No.	Description	Plate No.	No. per Unit	Remarks
5715	**DETENT CAM, CONTROL LINK AND PLUNGER ASSEMBLY, OPERATING KICKDOWN CONTROL (J.20-8301)**	15—18	1	
6758	**Key,** Woodruff $\frac{1}{2}''$ diameter × $\frac{1}{16}''$ positioning Control Shaft to Detent Cam (JGM.106958)	15—19	1	
6889	**Screw, Set** (Allen Head) No. 10 × $\frac{3}{16}''$ preventing withdrawal of Shaft from Cam (JGM.140879)	15—20	1	
3771	**Return Spring,** for Detent Cam (J.20-735)	15—11	1	
3793	**Screw,** Set, $\frac{1}{4}'' \times 1\frac{1}{4}''$, for Kickdown Adjustment (J.20-787)	15—21	1	
6752	**Washer** (Copper), on Setscrew (JGM.446195)	15—22	1	
3794	**Nut,** Stop, for Setscrew (J.20-778)	15—23	1	
5954	**Nut,** Dome, for Setscrew (JGM.441263)	15—24	1	
3787	**GOVERNOR ASSEMBLY (J.20-775)**	15—25	1	
3788	**Bearing,** on Governor Shaft (J.20-778)		1	
3782	**Washer** (Fibre) on Governor Shaft (J.20-767)		1	
3789	**Snap Ring,** retaining Bearing and Washer on Shaft (J.20-779)		2	
3785	**Shaft,** carrying Governor Assembly (J.20-773/A)	15—26	1	
9307	**Return Spring,** on Governor Shaft (20-7842)	15—27	1	
9309	**Spring,** for Booster (20-7833)		1	
9308	**Retainer,** for Spring (20-7832)		1	
3799	**PAWL AND TOGGLE ASSEMBLY OPERATING PARKING DEVICE (J.20-800)**	15—28	1	
7535	**Pivot Pin,** for Pawl (J.20-8081)	15—29	1	
7536	**Shaft,** Supporting Parking Brake (J.20-8051)	15—30	1	
3802	**Ring,** retaining Shaft, in Extension (J.20-807)	15—31	1	
3805	**INTERLOCK PISTON ASSEMBLY FOR PARKING BRAKE (J.20-810)**	15—32	1	
3806	**Spring,** for Parking Brake Interlock Piston (J.20-813)	15—33	1	
3783	**HOUSING FOR SPEEDOMETER DRIVE GEAR (J.20-770)**	15—34	1	
3786	**Gasket,** between Housing and Extension (J.20-774)	15—35	1	
3792	**Cover,** for Housing (J.20-786)	15—36	1	
3791	**Gasket,** between Housing and Cover (J.20-785)	15—37	1	
C.11915	**Stop Plate,** restricting Reverse Gear Operating Lever	15—38	1	
8433	**Bolt,** $\frac{5}{16}'' \times 2''$, securing Housing to Stop Plate (JGM.179826)		2	
5908	**Washer,** $\frac{5}{16}''$ Spring, on Bolt (JGM. 103320)		2	

AUTOMATIC TRANSMISSION UNIT

Part No.	Description	Plate No.	No. per Unit	Remarks
3784	**SPEEDOMETER DRIVE GEAR (J.20-772/A)**	15—39	1	
3775	**REAR PUMP ASSEMBLY (J.20-750)**		1	
5689	**Body only,** for Rear Pump (J.20-751)	15—40	1	
5690	**Driving Gear and Shaft Assembly** (J.20-755)	15—41	1	
5691	**Idler Gear Assembly** (J.20-758)	15—42	1	
5692	**Cover,** for Rear Pump (J.20-762)	15—43	1	
3779	**Gasket** (.002" thick) under Cover (Coloured clear) (J.70-761)	15—44	1	SELECTIVE RANGE FOR CLEARANCE BETWEEN COVER AND GEARS
3780	**Gasket** (.003" thick) under Cover (Coloured clear) (J.20-761/A)	15—44	1	
3778	**Gasket** (.005" thick) under Cover (Coloured Grey) (J.20-761/B)	15—44	1	
3776	**Gasket** (.006" thick) under Cover (Coloured Opaque Black or Manilla) (J.20-716/C)	15—44	1	
3777	**Gasket** (.008" thick) under Cover (Coloured Black or Manilla) (J.20-761/D)	15—44	1	
8422	**Bolt,** $\frac{1}{4}$" × $\frac{7}{8}$", securing Cover to Pump Body (J.20-1108)		2	
8426	**Washer,** $\frac{1}{4}$" Spring, on Bolt (JGM.103319)		2	
5693	**Governor Driven Gear** (J.20-765)	15—45	1	
6756	**Pin,** securing Governor Driven Gear (JGM.103723)	15—46	1	
3781	**Gasket,** between Rear Pump and Extension (J.20-766)	15—47	1	
8318	**Bolt,** $\frac{5}{16}$" × $2\frac{1}{4}$" securing Rear Pump to Extension (JGM.179827)		3	
5908	**Washer,** $\frac{5}{16}$" Spring, on Bolt (JGM.103320)		3	
7341	**Plug,** in Rear Pump Cover (JGM.444732)		1	
430212	**SPEEDOMETER DRIVEN GEAR ASSEMBLY**	15—48	1	
432853	**REVERSE STOP**		1	
307464/01	**INTERMEDIATE GEAR HAND LOCK CONTROL**		1	R.H. DRIVE ONLY
307464	**INTERMEDIATE GEAR HAND LOCK CONTROL**		1	L.H. DRIVE ONLY
405315	**Clip,** Retaining Lock Control		1	
422544/9	**Screw,** No. 10 × $\frac{5}{8}$", securing Clip to Flywheel Housing		1	
422508/09	**Washer,** $\frac{3}{16}$" Shakeproof on Setscrew		1	

AUTOMATIC TRANSMISSION UNIT

Part No.	Description	Plate No.	No. per Unit	Remarks
307187	**REAR ENGINE MOUNTING BRACKET ON GEARBOX**		1	
22106/06	**Setscrew,** $\frac{3}{8}'' \times \frac{3}{4}''$ securing Mounting Bracket to Gearbox		4	
430241/06	**Washer,** $\frac{3}{8}''$ Spring on Setscrew		4	
6767	**COMPLETE KIT OF SEALS FOR USE WHEN OVERHAULING TRANSMISSION UNIT**		1	
7476	**GASKET SET FOR USE WHEN OVERHAULING TRANSMISSION UNIT**		1	
8781	**REPAIR KIT FOR MULTI-DISC CLUTCH (J.20-0983)**		1	
	Consisting of:—			
6683	**Clutch Plate**		5	
6676	**Friction Disc**		4	
3653	**Retractor Spring**		12	
6764	**Snap Ring**		1	
3648	**Piston Seal**		1	
8783	**THRUST WASHER KIT (J.20-099)**		1	
	Consisting of:—			
3637	**Thrust Washer**		1	
3677	**Thrust Washer**		1	
3678	**Thrust Washer**		1	
3679	**Thrust Washer**		1	
3680	**Thrust Washer**		1	
3640	**Thrust Washer**		1	
3669	**Thrust Washer**		1	
5415	**Thrust Washer**		1	
3660	**Thrust Washer**		1	

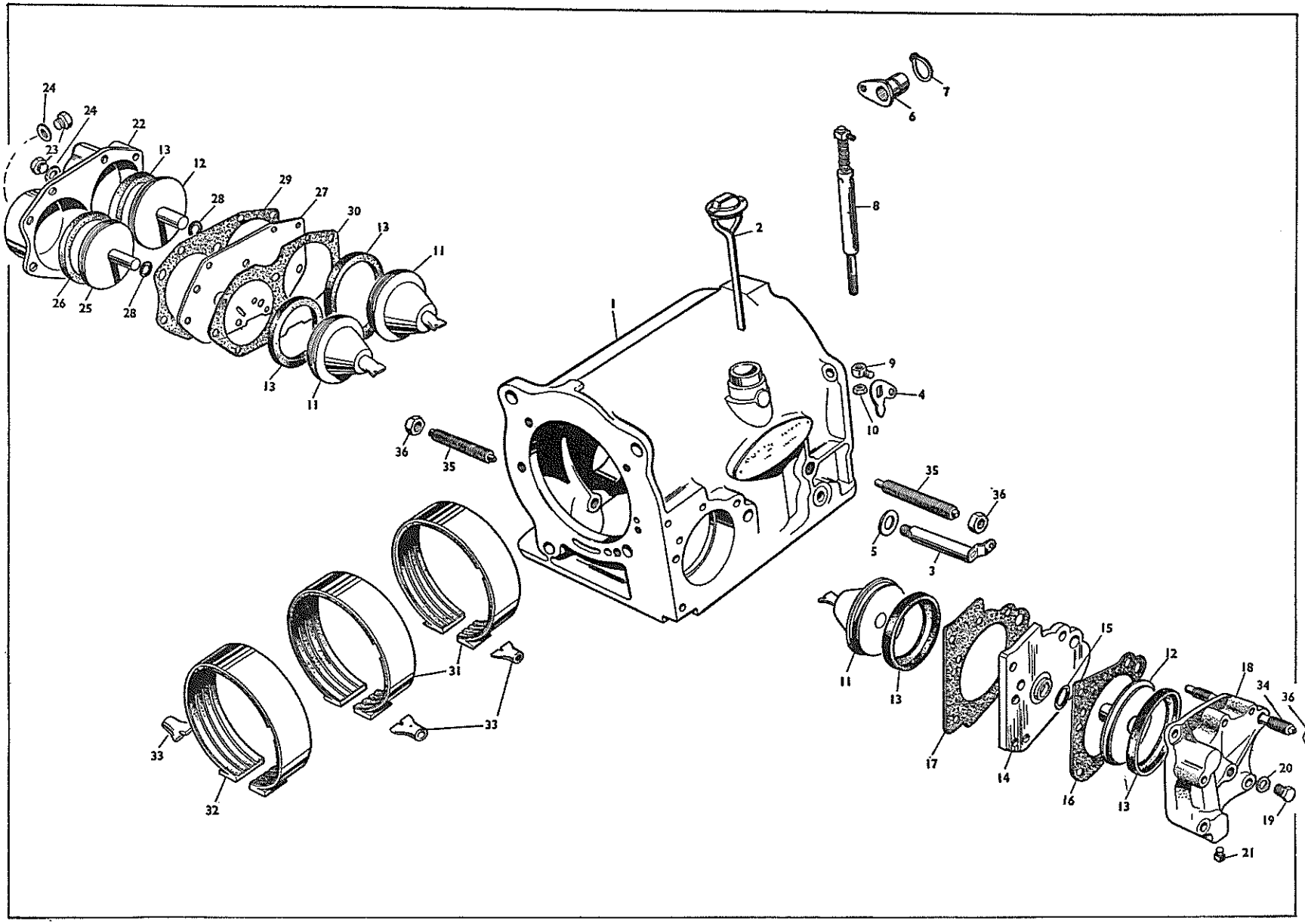
24
24
23
22
13
12
28
29
27
30
13
11
26
25
28
13
11
1
2
8
6
7
9
4
10
36
35
35
36
5
3
11
13
15
12
18
34
36
17
14
16
13
20
19
21
31
33
33
32

PLATE 12

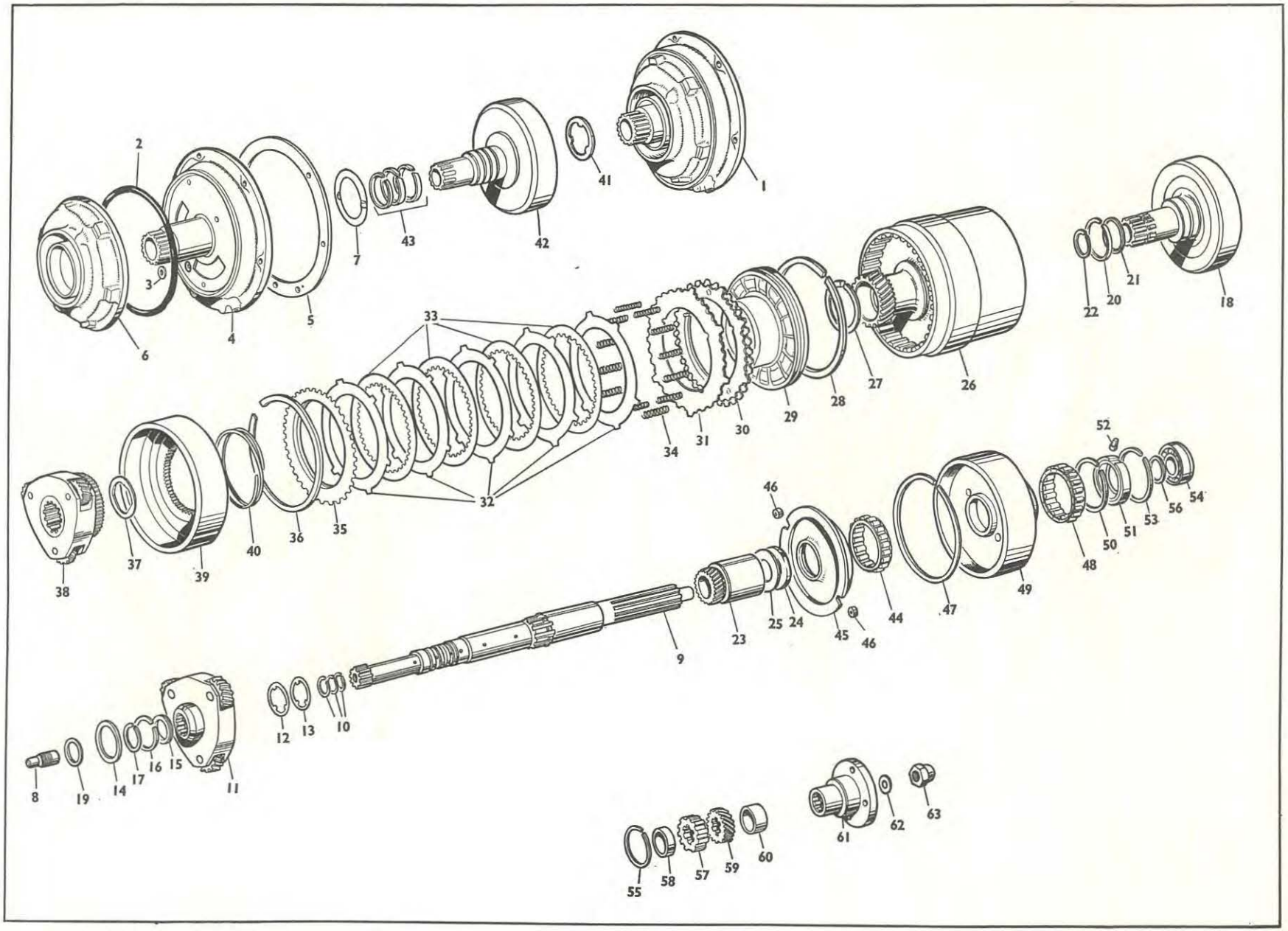
1
2
3
4
5
6
7
8
9
10
11
12
13
14
15
16
17
18
19
20
21
22
23
24
25
26
27
28
29
30
31
32
33
34
35
36
37
38
39
40
41
42
43
44
45
46
47
48
49
50
51
52
53
54
55
56
57
58
59
60
61
62
63

PLATE 13

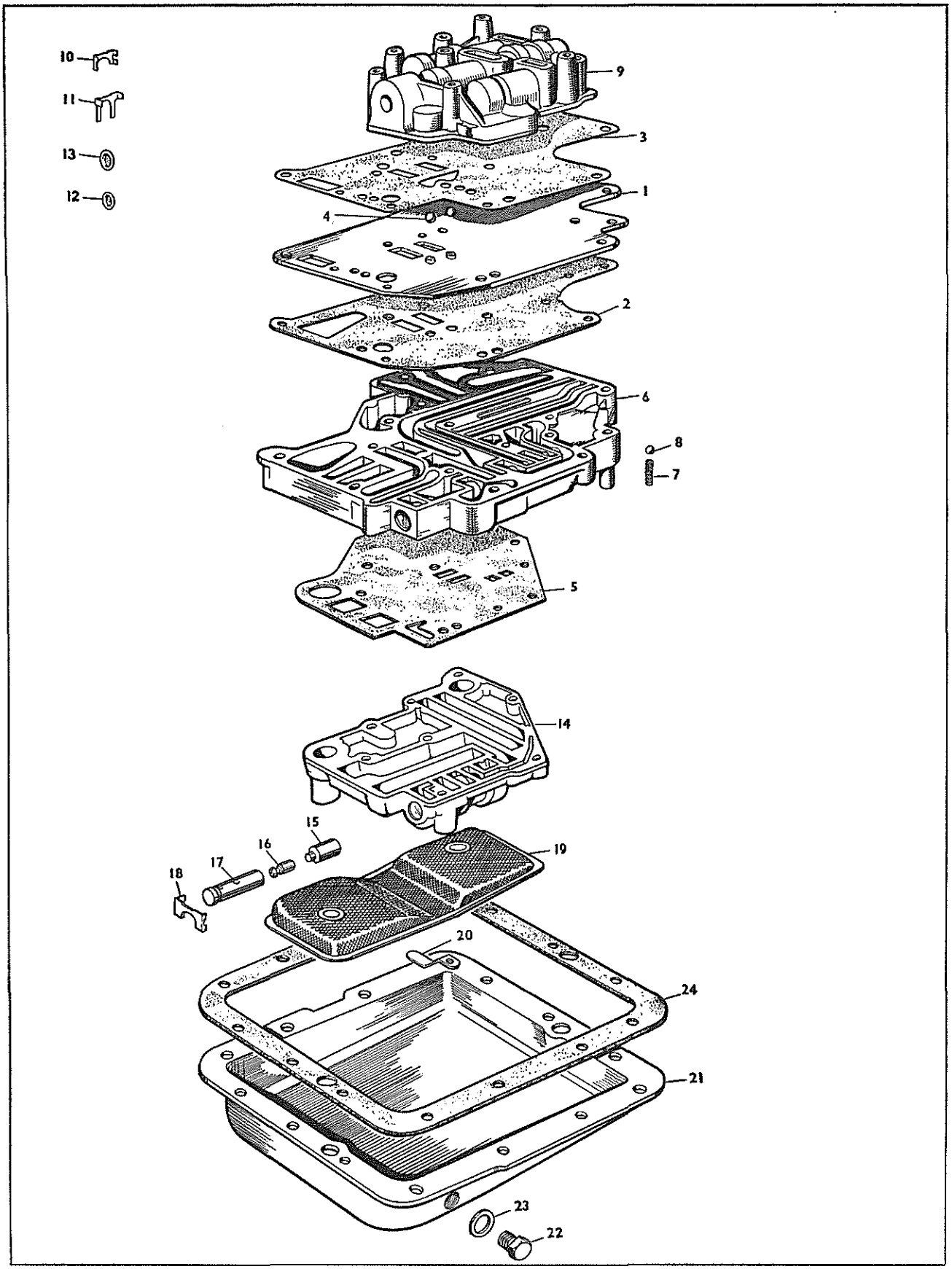

PLATE 14

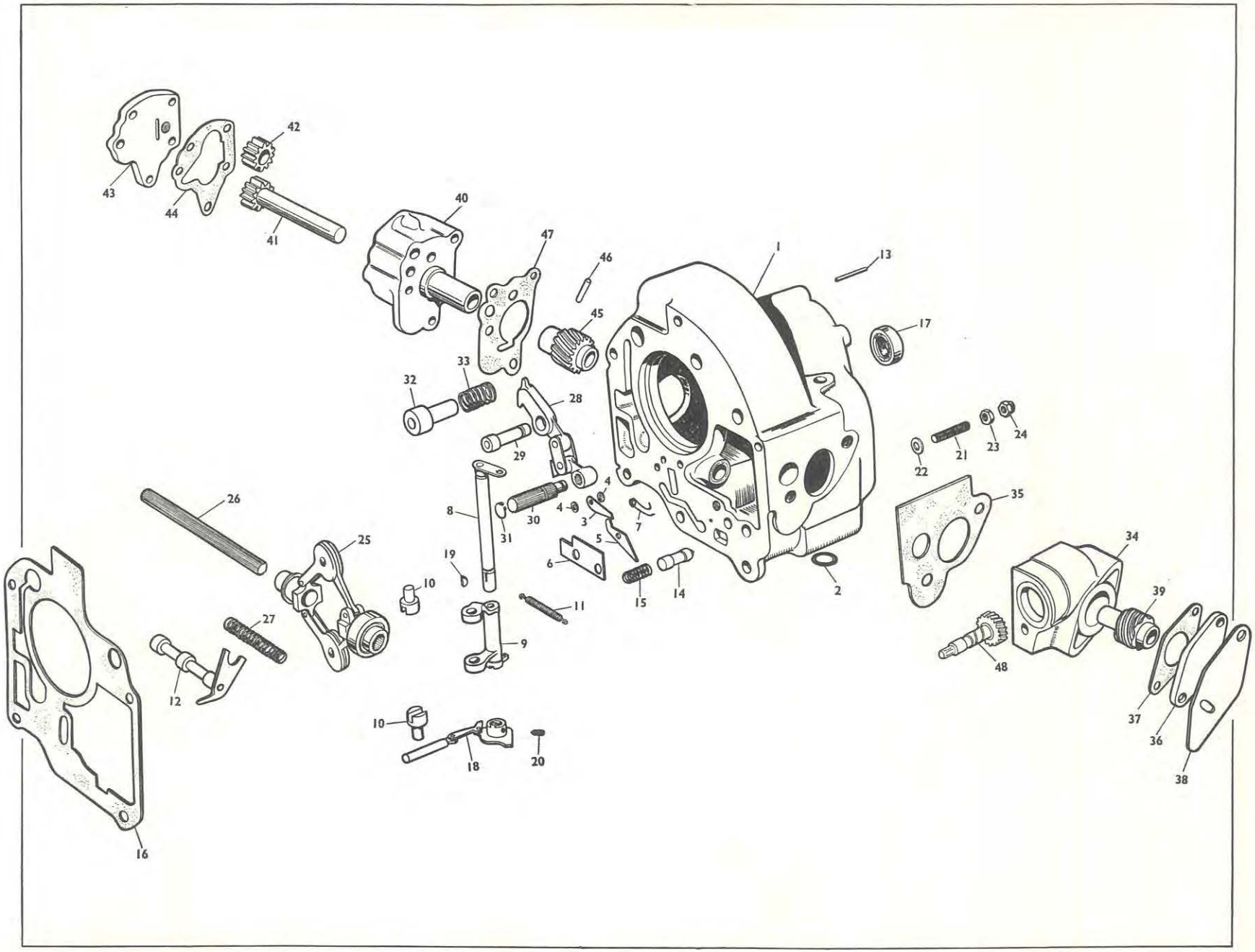
1
2
3
4
4
5
6
7
8
9
10
10
11
12
13
14
15
16
17
18
19
20
21
22
23
24
25
26
27
28
29
30
31
32
33
34
35
36
37
38
39
40
41
42
43
44
45
46
47
48

PLATE 15

AUTOMATIC TRANSMISSION UNIT MOUNTING DETAILS

Part No.	Description	Plate No.	No. per Unit	Remarks
135839	**FLYWHEEL HOUSING ASSEMBLY**		1	
135815	**Flywheel Housing**		1	
0608/16	**Bush,** for Flywheel Housing		2	
430304	**Dowel,** for Flywheel Housing		1	
34007/16	**Stud,** $\frac{7}{16}''$ × 2″, for Flywheel Housing		2	
13107	**Nut,** $\frac{7}{16}''$, securing Flywheel Housing and Gearbox		4	
430241/07	**Washer,** $\frac{7}{16}''$ Spring, on Studs		4	
307193	**Cover Plate,** for Air Outlet		2	
307229	**Cover Plate,** for Air Inlet		2	
422545/13	**Screw,** No. 10 × $\frac{1}{2}''$ securing Cover Plate		12	
430241/03	**Washer,** Spring, on Screws		12	
307170	**STARTER GEAR RING**		1	
135832	**Mounting Plate,** for Starter Gear Ring		1	
430205	**Screw,** securing Starter Gear Ring to Mounting Plate—Long		6	
430206	**Screw,** securing Starter Gear Ring to Mounting Plate—Short		2	
430241/06	**Washer,** $\frac{3}{8}''$ Spring, on Screws		8	
307226	**Spacing Washer,** for Mounting Plate		2	
430239	**Bolt,** for Crankshaft Flange		6	
430237	**Lock Plate,** on Bolt		3	
430238	**Dowel,** for Crankshaft Flange		2	
22105/11	**Setscrew,** $\frac{5}{16}''$ × $1\frac{3}{8}''$ securing Flywheel Housing, Support, Plate and Cylinder Block		2	
22105/12	**Setscrew,** $\frac{5}{16}''$ × $1\frac{1}{2}''$, securing Flywheel Housing, Support Plate and Cylinder Block		3	
22105/10	**Setscrew,** $\frac{5}{16}''$ × $1\frac{1}{4}''$, securing Flywheel Housing, Support Plate and Cylinder Block		1	
22105/07	**Setscrew,** $\frac{5}{16}''$ × $\frac{7}{8}''$, securing Flywheel Housing and Support Plate		6	
22105/09	**Setscrew,** $\frac{5}{16}''$ × $1\frac{1}{2}''$, securing Flywheel Housing, Support Plate and Steady Bracket		2	
430241/05	**Washer,** $\frac{5}{16}''$ Spring, on Screws		14	

PROPELLER SHAFTS

Part No.	Description	Plate No.	No. per Unit	Remarks
430257	**FRONT PROPELLER SHAFT**		1	
12	**Flange Yoke** (K2-2-239)	16—1	1	
46	**Journal Assembly,** connecting Yokes to Propeller Shaft (K5-L4)	16—2	1	
248	**Grease Nipple,** on Journals (94-GB1598)	16—3	1	
11	**Flange,** at Rear of Propeller Shaft (K2-1-GB1894)	16—4	1	
449	**Key,** for Rear Flange (94-GB2254)	16—5	2	
113	**Nut,** Slotted, securing Flange to Rear of Propeller Shaft (12-74-GB161)	16—6	1	
73	**Split Pin** (8-72-59)	16—7	1	
132880/04	**Support Plate and Tube,** for Centre Bearing (94-GB2363)	16—8	1	
250	**Centre Bearing** (94-GB2147)	16—9	1	
249	**Dust Shield,** for Centre Bearing (94-GB2146)	16—10	1	
132880/08	**Rubber Insulator,** for Support Plate (94-GB2559)	16—11	2	
132880/05	**Stud,** securing Rubber Insulator to Support Plate (94-GB2365)	16—12	2	
427485	**Bush** (Rubber), on Centre of Stud	16—13	2	
132880/06	**Washer,** Plain, on Stud (94-GB2375)	16—14	2	
FG.106/X	**Washer,** Spring, on Stud (6-75-19)	16—15	4	
FN.106/L	**Nut,** on Stud (6-74-GB11)	16—16	4	
430256	**Bolt,** securing Propeller Shaft to Gearbox Flange, and to Rear Propeller Shaft Flange Yoke		8	
422514/07	**Nut,** Nyloc, on Bolt		8	
135226	**CENTRE BEARING SUPPORT**	16—17	1	
11105/06	**Bolt,** securing Bearing Support to Frame		4	
13105	**Nut,** on Bolt		4	
422500/02	**Washer,** Plain, on Bolt		4	
430241/05	**Washer,** Spring, on Bolt		4	
302150	**REAR PROPELLER SHAFT COMPLETE**		1	
12	**Flange Yoke** (K.2-2-239)	16—18	2	
13	**Sleeve Yoke** (K.2-3-68)	16—19	1	
46	**Journal Assembly,** connecting Yokes to Propeller Shaft (K5-L4)	16—20	2	
248	**Grease Nipple,** on Journals (94-GB1598)	16—21	1	
26	**Dust Cap,** for Sleeve Yoke (3-14-39)	16—22	1	
28	**Washer** (Cork), inside Dust Cap (K3-16-43)	16—23	1	
27	**Washer** (Steel), inside Dust Cap (3-15-33)	16—24	1	
302927/09	**Grease Nipple,** on Sleeve Yoke (94-GB2204)	16—25	1	
420256	**Bolt,** securing Rear Flange Yoke to Rear Axle Flange		4	
422514/07	**Nut,** Nyloc, on Bolt		4	

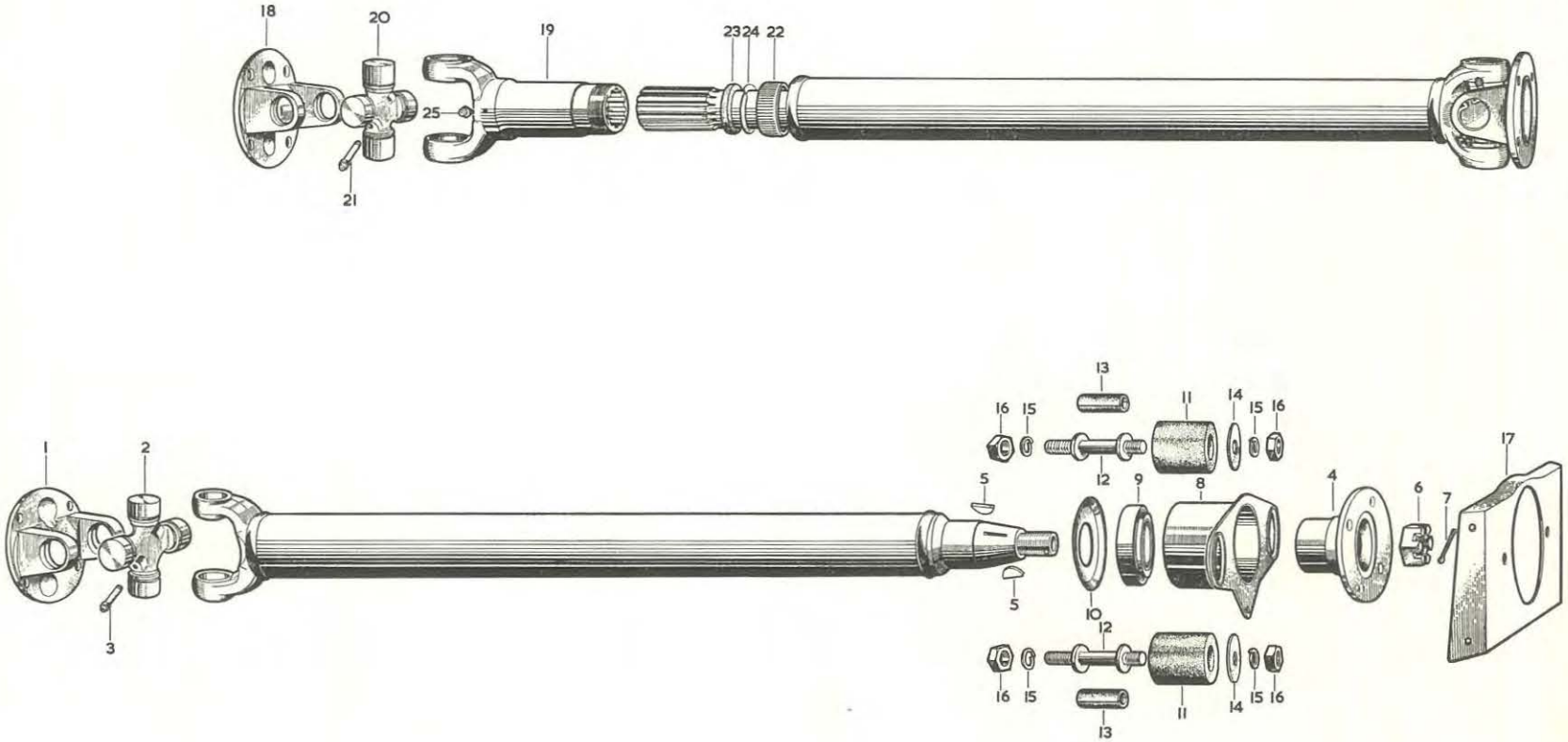
18
20
19
23 24 22
25
21
1
2
3
5
5
13
16 15
12
11
14
15 16
9
8
10
12
16 15
13
11
14
15 16
4
6
7
17

PLATE 16

Part No.	Description	Plate No.	No. per Unit	Remarks
135964	**REAR AXLE CASING**		1	**R.H. DRIVE FITTED FROM CHASSIS No. 98300 TO 98489**
136063	**REAR AXLE CASING**	17—1	1	**R.H. DRIVE FITTED TO CHASSIS No. 98490 AND SUBS.**
136064	**REAR AXLE CASING**		1	**L.H. DRIVE FITTED TO CHASSIS No. 98751 AND SUBS.**
423031	**Drain Plug,** in Axle Casing	17—2	1	
428242	**Washer,** under Drain Plug	17—3	1	
135313	**NOSEPIECE ASSEMBLY RATIO 3.92 : 1**		1	
373	**Nosepiece Casing** (H108-1)	17—4	1	
411	**Coupling Flange,** for Rear Propeller Shaft (NM121-23)	17—5	1	
344	**Nut,** securing Coupling Flange to Pinion (H106-25)	17—6	1	
314	**Oil Seal,** at Outer End of Pinion (H105-22)	17—7	1	
385	**Roller Bearing,** at Outer End of Pinion (Timken 02475/02420) (H108-41)	17—8	1	
319	**Shim,** outer, adjusting Pinion (.004" thick) (H105-39)	17—9	As req'd	
320	**Shim,**outer, adjusting Pinion (.006" thick) (H105-39A)	17—9	As req'd	
321	**Shim,** outer, adjusting Pinion (.010" thick) (H105-39B)	17—9	As req'd	
343	**Distance Piece,** for Outer Bearing (H106-8)	17—10	1	
384	**Roller Bearing,** at Inner End of Pinion (Timken 3490/3420) (H108-40)	17—11	1	
315	**Shim,** Inner, adjusting Pinion (.004" thick) (H105-38)	17—12	As req'd	**USE SHIM OF DESIRED THICKNESS**
316	**Shim,**Inner,adjusting Pinion (.006" thick) (H105-38A)	17—12	As req'd	
318	**Shim,** Inner, adjusting Pinion (.010"thick) (H105-38B)	17—12	As req'd	
135313/14	**Crown Wheel and Pinion** (3.92 : 1)	17—13	1	
502	**Bolt,** securing Crown Wheel to Differential Case (M146-9)	17—14	10	
503	**Tab Washer,** securing Bolt (M146-11)	17—15	5	
496	**Differential Casing** (M146-1-2)	17—16	2 halves	
500	**Bolt,** securing Differential Casing together (M146-6)	17—17	8	
501	**Tab Washer,** on Bolt (M146-8)	17—18	4	
807	**Roller Bearing,** on Differential Case (Timken 25577/25522) (A.254-63)	17—19	2	
382	**Adjusting Nut,** for Differential Roller Bearing (H108-33)	17—20	2	
383	**Tab Washer,** securing Adjusting Nut (H108-34)	17—21	2	
406	**Screw Retaining Tab Washer** (NM.119-36)	17—22	2	
375	**Bolt,** securing Bearing Cap to Nosepiece (H108-3)		4	
294	**Tab Washer,** on Bolt (H101-4)		4	
447	**Spider,** for Differential (M133-5)	17—23	1	
499	**Pinion,** on Differential Spider (M146-4)	17—24	4	
452	**Thrust Washer,** on Pinion (M135-14)	17—25	4	
498	**Gear Wheel,** for Differential (M146-3)	17—26	2	
451	**Thrust Washer,** on Gear Wheel (M135-13)	17—27	2	
345	**Oil Filler Plug,** on Nosepiece (H106-28)	17—28	1	
5533	**Washer,** on Filler Plug (NM120-29)	17—29	1	
346	**Dipstick,** in Oil Filler Plug (H106-30)	17—30	1	
12106/08	**Screw,** Set, securing Nosepiece to Rear Cover		10	
430241/06	**Washer,** Spring, on Setscrew		10	
802	**Gasket,** between Nosepiece and Rear Cover	17—31	1	
420657	**Dowel,** for Nosepiece		2	

REAR AXLE

Part No.	Description	Plate No.	No. per Unit	Remarks
307616	**ADAPTOR PLATE FOR REAR BRAKE CALIPER**	17—32	2	
11106/09	**Bolt,** securing Adaptor Plate to Rear Axle Casing		8	
422514/07	**Nut,** Nyloc, on Bolt		4	
13106	**Nut,** on Bolt		4	
430241/06	**Washer,** Spring, on Bolt		4	
307614	**REAR WHEEL HUB ASSEMBLY, R.H.**	17—33	1	
430260	**Stud,** securing Wheels, R.H. Thread		5	
425658/02	**Mills Pin** (G.P.I. $\frac{1}{8}'' \times \frac{1}{4}''$)		5	
422753	**Nut,** on Wheel Stud, R.H. Thread		5	
307712	**REAR WHEEL HUB ASSEMBLY, L.H.**		1	
431020	**Stud,** securing Wheels, L.H. Thread		5	
425658/02	**Mills Pin** (G.P.I. $\frac{1}{8}'' \times \frac{1}{4}''$)		5	
431021	**Nut,** on Wheel Stud, L.H. Thread		5	
431706	**Oil Seal,** for Rear Hub, Super Oil Seal No. 31928, $\frac{1}{2}''$	17—34	2	
423151/10	**Ball Bearing,** for Rear Hub (No. 345)	17—35	2	
423040	**Nut,** for Axle Casing End, R.H.	17—36	1	
423041	**Nut,** for Axle Casing End, L.H.		1	
274273	**Locking Ring,** securing Nut	17—37	2	
133863	**Driving Shaft**	17—38	2	
422521/29	**Grease Nipple,** on end of Shaft	17—39	2	
427386	**Gasket,** for Bearing Housing	17—40	2	
307615	**Distance Plate,** for Rear Wheel	17—41	2	
12305/06	**Screw,** Set, C/sk. Head securing Plate		4	

Part No.	Description	Plate No.	No. per Unit	Remarks
26238	**REAR AXLE ASSEMBLY (RATIO 3.77 : 1) (4HA-001-71)**		1	**R.H. DRIVE ONLY**
26238/01	**Carrier and Tube Assembly** (4HA-101-45)	18—1	1	**R.H. DRIVE ONLY**
74	**Screw,** Set, securing Differential Bearing Caps (8B-NC.36)	18—2	4	
C.728	**Washer,** Shakeproof, on Setscrews (8LW-115)	18—3	4	
3930	**Cover,** for Carrier (4HA-010)	18—4	1	
3823	**Plug,** for Filler and Drain Apertures (HA-059)	18—5	2	
3931	**Gasket,** for Cover (4HA-026)	18—6	1	
CS.131/5D	**Screw,** Set, securing Cover (5B-NC.10)	18—7	10	
47	**Lockwasher,** on Setscrews (5LW-95)	18—8	10	
6312	**Differential Case Assembly** (4HA-082-7)		1	
3845	**Roller Bearing,** on Differential Case (2HA-024) (Timken 24780-24721)	18—9	2	
3935	**Shim,** adjusting Differential (.003" thick) (4HA-046)	18—10	As req'd	**USE SHIM OF DESIRED THICKNESS**
3936	**Shim,** adjusting Differential (.005" thick) (4HA-047)	18—10	As req'd	
3937	**Shim,** adjusting Differential (.010" thick) (4HA-048)	18—10	As req'd	
3938	**Shim,** adjusting Differential (.030" thick) (4HA-049)	18—10	As req'd	
6306	**Crown Wheel and Pinion** (4HA-105-7A)	18—11	1	
6301	**Screw,** Set, securing Crown Wheel to Differential Case (3HA-075/6)	18—12	10	
6316	**Lock Strap,** securing Crown Wheel Setscrews (4HA-074/2)	18—13	5	
3844	**Roller Bearing,** at inner end of Pinion (2HA-023) (Timken 31593-31520)	18—14	1	
3860	**Shim,** inner, adjusting Pinion (.003" thick) (2HA-043)	18—15	As req'd	**USE SHIM OF DESIRED THICKNESS**
3861	**Shim,** inner, adjusting Pinion (.005" thick) (2HA-044)	18—15	As req'd	
3862	**Shim,** inner, adjusting Pinion (.010" thick) (2HA-045)	18—15	As req'd	
8029	**Distance Washer,** behind Outer Pinion Shims (4HA-115)	18—15A	1	
3856	**Shim,** outer, adjusting Pinion (.003" thick) (2HA-039)	18—16	As req'd	**USE SHIM OF DESIRED THICKNESS**
3857	**Shim,** outer, adjusting Pinion (.005" thick) (2HA-040)	18—16	As req'd	
3858	**Shim,** outer, adjusting Pinion (.010" thick) (2HA-041)	18—16	As req'd	
3859	**Shim,** outer, adjusting Pinion (.030" thick) (2HA-042)	18—16	As req'd	
3843	**Roller Bearing,** at outer end of Pinion (2HA-022) (Timken 02872-02820)	18—17	1	
3934	**Oil Slinger,** on Pinion (4HA-036)	18—18	1	
3840	**Oil Seal,** on Pinion (2HA-019)	18—19	1	
3841	**Gasket,** for Pinion Oil Seal (2HA-020)	18—20	1	
3879	**Companion Flange Assembly** (2HA-083)	18—21	1	
115	**Nut,** securing Companion Flange to Pinion (12LN-NF.9)	18—22	1	
114	**Washer,** under Nut (12W-24)	18—23	1	
26238/23	**Axle Shaft** (4HA-005-48)		2	
C.970/1	**Grease Nipple,** on Axle Tubes (Tec. NA.6673)	18—24	2	
26239	**REAR AXLE ASSEMBLY (RATIO 3.77 : 1) (4HA-001-72)**		1	**L.H. DRIVE ONLY**
26239/01	**Carrier and Tube Assembly** (4HA-101-46)		1	**L.H. DRIVE ONLY**

For all other items please refer to Rear Axle 26238

REAR AXLE

Part No.	Description	Plate No.	No. per Unit	Remarks
6312	**DIFFERENTIAL ASSEMBLY (4HA-082-7)**		1	
6314	**Case only,** for Differential (4HA-006-5)	18—25	2 halves	
3929	**Gear,** Side, for Differential (4HA-007)	18—26	2	
3855	**Thrust Washer,** for Side Gears (2HA-038)	18—27	2	
3835	**Gear,** Differential Pinion Mate (2HA-008-1)	18—28	2	
3854	**Thrust Washer,** for Pinion Mate Gears (2HA-037)	18—29	2	
3837	**Shaft,** for Pinion Mate Gears (2HA-012)	18—30	1	
3932	**Spacer,** on Shaft (4HA-033)	18—31	1	
3838	**Pin,** Locking Pinion Mate Gear Shaft in Differential Case (2HA-013)	18—32	1	
3879	**PINION COMPANION FLANGE (2HA-083)**	18—21	1	
3842	**Dust Shield,** for Companion Flange (2HA-021)		1	
26238/23	**REAR AXLE SHAFT (4HA-005-48)**	18—33	2	
C.7356	**Key,** Locating Hubs on Axle Shaft (2HA-029)	18—34	2	
3848	**Oil Seal** in Carrier Tube, for Axle Shafts (2HA-027)	18—35	2	
26238/25	**Roller Bearing,** for Hubs (4HA-025-4)	18—36	2	
131	**Nut,** slotted, securing Hubs to Axle Shafts (16SN-NF.10)	18—37	2	
133	**Washer,** under Slotted Nut (16W-31)	18—38	2	
L.104/14U	**Split Pin,** retaining Nuts (8SP-14)	18—39	2	
308131	**REAR CALIPER SUPPORT BRACKET (S.308131)**	18—40	1	
134502/01	**Bolt,** securing Bracket to Axle (6B-NF-19)		10	
26223/19	**Nut,** on Bolt (6LN-NF-6B)		10	
	Lockwasher, under Nut (6W-12)		10	
7955	**REAR HUB OIL SEAL (4HA-057/5)**	18—41	2	
308365	**R.H. REAR HUB ASSEMBLY**	18—42	1	
430261	**Stud,** R.H., in Hub for fixing of Road Wheels		5	
422753	**Nut,** R.H., on Stud for securing Road Wheels	18—43	5	
308366	**L.H. REAR HUB ASSEMBLY**		1	
431019	**Stud,** L.H., in Hub for fixing of Road Wheels		5	
431021	**Nut,** L.H., on Stud for securing Road Wheels		5	

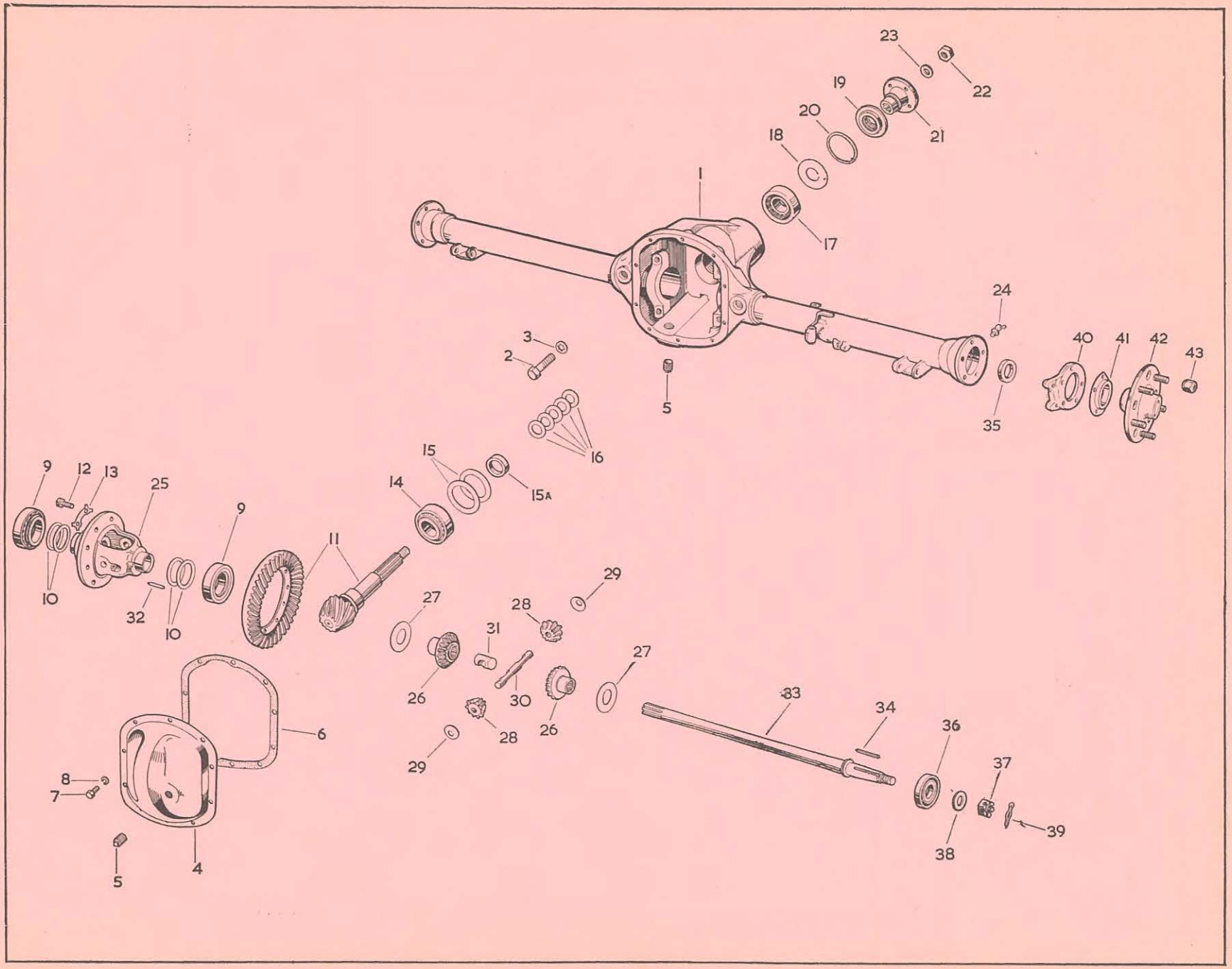
1
2
3
4
5
6
7
8
9
10
11
12
13
14
15
15A
16
17
18
19
20
21
22
23
24
25
26
27
28
29
30
31
32
33
34
35
36
37
38
39
40
41
42
43

PLATE 18

FRONT SUSPENSION

Part No.	Description	Plate No.	No. per Unit	Remarks
425014	**R.H. BOTTOM TRANSVERSE LINK ASSEMBLY**	19—1	1	
425015	**L.H. BOTTOM TRANSVERSE LINK ASSEMBLY**		1	
422962	**Bearing** (Metalastik), in Link Eye	19—2	2	
11108/28	**Bolt,** securing Bottom Transverse Link to Frame Attachment Bracket		2	
422514/09	**Nut,** Nyloc, on Bolt		2	
302499	**SPRING, FRONT SUSPENSION**	19—3	2	
420933	**Seating** (Rubber) for Spring	19—4	2	
133109	**R.H. PEDESTAL**	19—5	1	
133108	**L.H. PEDESTAL**		1	
422963	**Bearing** (Metalastik), Pedestal to Top Link	19—6	2	
400146	**Spherical Bearing,** Pedestal to Bottom Link	19—7	2	
400116	**Bush,** Retaining Spherical Bearing	19—8	4	
400191-1	**Shim,** between Bush and Retaining Plate (.002" thick)	19—9	As req'd	
400191-2	**Shim,** between Bush and Retaining Plate (.003" thick)	19—9	As req'd	
400191-3	**Shim,** between Bush and Retaining Plate (.005" thick)	19—9	As req'd	
400111	**Retaining Plate,** for Bearing	19—10	4	
400610	**Cover** (Rubber), for Bearing	19—11	4	
400203	**Tube,** for Bearing End	19—12	4	
400611	**Retainer,** for Bearing Cover	19—13	4	
11104/14	**Bolt,** securing Bearing Assembly to Pedestal		8	
13104	**Nut,** on Bolt		8	
430241/04	**Washer,** Spring, on Bolt		8	
422750	**Bolt,** securing Bottom Link to Pedestal		2	
13310	**Nut,** Slotted, on Bolt		2	
422501/27	**Split Pin,** retaining Slotted Nuts		2	
422521/29	**Grease Nipple,** for Pedestal	19—14	2	
430101	**ADJUSTER FOR PEDESTAL**	19—15	2	
430102	**Dowel,** for Pedestal		2	
12106/14	**Screw,** Set, for Pedestal Adjuster		4	
430107	**Washer,** on Setscrew		4	
13106	**Lock Nut,** on Setscrew		4	

Part No.	Description	Plate No.	No. per Unit	Remarks
302598	**TOP TRANSVERSE LINK ASSEMBLY**		2	
302597	**Link Member**	19—16	2	**Fitted to DF.316/7 only**
422963	**Bush** (Metalastik), in Link Eye	19—17	2	
400080	**Oil Retainer** (Rubber)	19—18	2	
420934	**Fork End Assembly**	19—19	2	
422521/30	**Grease Nipple,** in Fork End	19—20	2	
308377	**TOP TRANSVERSE LINK ASSEMBLY**		2	
302597	**Link Member**		2	**Fitted to DF.318/9 only**
422963	**Bush** (Metalastik), in Link Eye		2	
400080	**Oil Retainer** (Rubber)		2	
431918	**Fork End Assembly**		2	
422521/30	**Grease Nipple,** in Fork End		2	
11108/26	**Bolt,** securing Transverse Link to Pedestal, also to Frame		4	
422514/09	**Nut,** Nyloc, on Bolt		4	
133132	**R.H. TORQUE LINK COMPLETE**	19—21	1	
133131	**L.H. TORQUE LINK COMPLETE**		1	
425027	**Bush** (Metalastik), in Link	19—22	2	
11106/11	**Bolt,** securing Torque Link to Pedestal		4	
11106/18	**Bolt,** securing Torque Link to Pedestal		4	
422514/07	**Nut,** Nyloc, on Bolts		8	
11110/46	**Bolt,** securing Link Eye to Frame		2	
422514/11	**Nut,** Nyloc, on Bolt		2	
304789	**SWIVEL AXLE AND OUTER RACE ASSEMBLY**	19—23	2	
425585	**Outer Race,** Needle Roller Bearing, Top		2	
426250	**Bush,** Swivel Axle, bottom		2	

FRONT SUSPENSION

Part No.	Description	Plate No.	No. per Unit	Remarks
307495	**SWIVEL PIN**	19—24	2	
423171/09	**Needle Roller,** Top, 3 mm. × 19.8 mm.	19—25	48	
425587	**Cap,** Needle Roller Bearing, Top	19—26	2	
425588	**Oil Seal** (Cork), Top	19—27	2	
401798	**Cap** for Oil Seal, Top	19—28	2	
416335	**Adaptor,** for Grease Nipple, Top	19—29	2	
422521/44	**Grease Nipple,** Top	19—30	2	
426255	**Sealing Ring,** Swivel Pin	19—31	2	
420932	**Cotter Pin,** securing Pivot Pin	19—32	2	
13104	**Nut,** on Cotter Pin		2	
422500/01	**Washer,** Plain, on Cotter Pin		2	
424733	**Washer** (Felt), on Pivot Pin, Lower	19—33	2	
424734	**Retainer,** for Felt Washer	19—34	2	
425515	**Thrust Pad,** Swivel Pin	19—35	2	
425543	**Bottom Cover,** Swivel Pin	19—36	2	
425592	**Shim,** for Bottom Cover (.005" thick)	19—37	as req'd	
12106/08	**Screw,** Set, securing Bottom Cover to Swivel Axle		4	
425536	**Tab Washer,** on Setscrew		2	
422521/39	**Grease Nipple,** Bottom	19—38	2	
305114	**R.H. STEERING ARM**	19—39	1	
305115	**L.H. STEERING ARM**		1	
432401	**R.H. Hose Bracket,** Front Brakes	19—40	1	**Fitted to DF.318/9 only**
432400	**L.H. Hose Bracket,** Front Brakes		1	
430929	**R.H. Hose Bracket,** Front Brakes		1	**Fitted to DF.316/7 only**
430930	**L.H. Hose Bracket,** Front Brakes		1	
307607	**R.H. ADAPTOR PLATE FOR FRONT BRAKE CALIPER**	19—41	1	
307608	**L.H. ADAPTOR FOR FRONT BRAKE CALIPER**		1	
11106/11	**Bolt,** securing Adaptor Plate and Hose Bracket to Swivel Axle		2	
11106/10	**Bolt,** securing Adaptor Plate to Swivel Axle		2	
11106/16	**Bolt,** securing Steering Arm and Adaptor Plate to Swivel Axle		4	
422514/07	**Nut,** Nyloc, on Bolts		8	
431705	**Oil Seal,** for Swivel Axle	19—42	2	
425117	**Distance Piece,** Swivel Axle	19—43	2	

Part No.	Description	Plate No.	No. per Unit	Remarks
307612	**R.H. FRONT HUB ASSEMBLY**	19—44	1	
430261	**Stud,** securing Wheels, R.H. Thread		5	
425658/02	**Mills Pin** (G.P.I. $\frac{1}{8}'' \times \frac{1}{4}''$)		5	
422753	**Nut,** on Wheel Stud, R.H. Thread		5	
307713	**L.H. FRONT HUB ASSEMBLY**		1	
431019	**Stud,** securing Wheels, L.H. Thread		5	
425658/02	**Mills Pin** (G.P.1. $\frac{1}{8}'' \times \frac{1}{4}''$)		5	
431021	**Nut,** on Wheel Stud, L.H. Thread		5	
423173/18	**Bearing,** Inner, for Hub (Timken 2786-2720)	19—45	2	
423173/06	**Bearing,** Outer, for Hub (Timken 1994X-1922)	19—46	2	
420955	**Adjusting Nut,** for Front Hub Bearing	19—47	2	
276462	**Peg,** for Adjusting Nut	19—48	2	
276448	**Tab Washer,** for Adjusting Nut	19—49	2	
13112	**Nut,** securing Hub to Swivel Axle	19—50	2	
422813	**Tab Washer,** under Nut	19—51	2	
302822	**Cap,** for Front Hub	19—52	2	
430941	**Seal** (Rubber), for Cap Nut	19—53	2	
302154	**BRACKET LOCATING FRONT SUSPENSION SPRING TOP**	19—54	2	
302153	**Bracket,** securing Front Shock Absorber to Frame	19—55	2	
422974	**Bolt,** securing Bracket to Frame		8	
430241/06	**Washer,** Spring, on Bolt		8	
134477	**ANTI ROLL BAR**	19—56	1	
420979	**Bracket,** Supporting Anti-Roll Bar	19—57	2	
420980	**Bracket,** retaining Anti-Roll Bar in Support Bracket	19—58	2	
425472	**Sleeve,** Rubber, on Anti-Roll Bar in Support Bracket	19—59	2	
12106/07	**Screw,** Set, securing Brackets to Frame		8	
430241/06	**Washer,** Spring, on Setscrew		8	
426144	**Clip,** retaining Sleeve	19—60	2	
11105/16	**Bolt,** securing Clip to Anti-Roll Bar		2	
13105	**Nut,** on Bolt		2	
422500/02	**Washer,** Plain, under Nut		2	
430241/05	**Washer,** Spring, under Nut		2	

FRONT SUSPENSION

Part No.	Description	Plate No.	No. per Unit	Remarks
302823	**SPINDLE, SECURING ANTI-ROLL BAR TO FRONT SUSPENSION**	19—61	2	
422688	**Buffer Rubber,** at each end Anti-Roll Bar Spindle	19—62	8	
420977	**Washer,** retaining Buffers on Anti-Roll Bar Spindle	19—63	8	
13306	**Nut,** Slotted, on Spindle		4	
422501/07	**Split Pin,** retaining Nut		4	
302122	**FRONT SHOCK ABSORBER**	19—64	2	**DF. 316/7 only**
302122/01	**Rubber Buffer,** at top of Shock Absorber		4	
302122/02	**Rubber Bush** (Conical), in bottom eye of Shock Absorber		4	
423137	**Bush,** in bottom Transverse Link, aligning Shock Absorber Bushes	19—65	4	
309020	**FRONT SHOCK ABSORBER**		2	**DF.318/9 only**
C.10647	**Rubber Buffer,** at Top of Shock Absorber		4	
C.3273	**Rubber Bush** (Conical), in Bottom Eye of Shock Absorber		4	
423137	**Bush,** in bottom Transverse Link, aligning Shock Absorber Rubber Bushes	19—65	4	

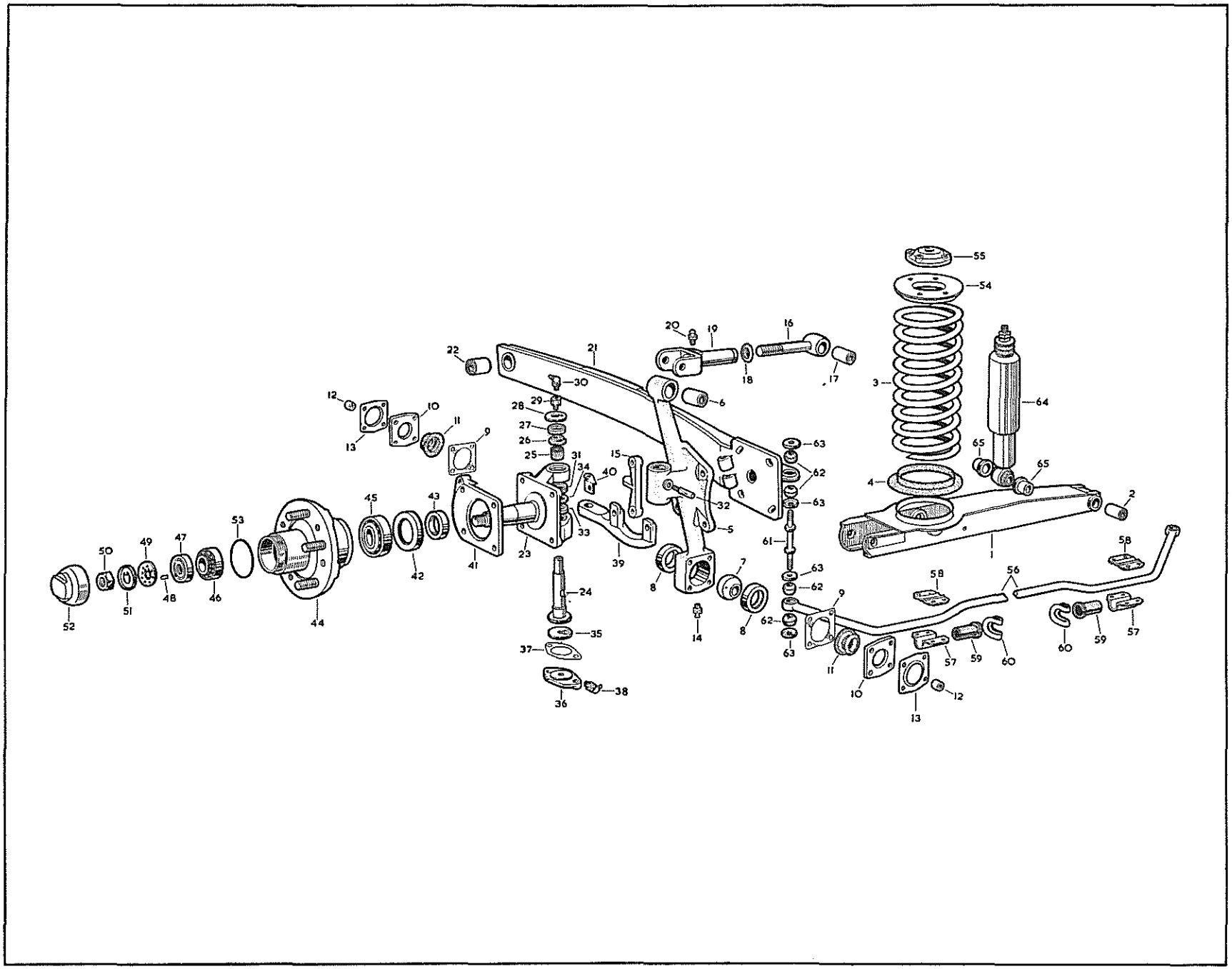
55
54
20
19
16
22
21
18
17
3
64
30
6
12
29
28
10
11
9
27
26
13
25
31
34
40
63
65
65
15
62
4
2
32
63
45
43
53
5
61
1
58
50
49
47
7
63
58
56
41
23
33
39
42
8
62
9
24
52
51
48
46
44
8
14
62
35
63
57
59
60
60
59
57
37
11
10
12
13
38
36

ROAD WHEELS

Part No.	Description	Plate No.	No. per Unit	Remarks
135318	**ROAD WHEEL**		5	
422753	**Nut,** securing Road Wheels (R.H. Thread)		10	
431021	**Nut,** securing Road Wheels (L.H. Thread)		10	
427037	**TYRE, DUNLOP STANDARD TUBELESS (6.70 × 16.0″) TO FIT (6″ × 5½″ K RIM)**		5	
136042	**RIM FINISHER**		5	
135999	**HUB CAP**		4	
	BALANCE WEIGHTS FOR ROAD WHEELS			
423039-1	**Balance Weight—½ Oz.**		As req'd	
423039-2	**Balance Weight—1 Oz.**		As req'd	
423039-3	**Balance Weight—1½ Oz.**		As req'd	
423039-4	**Balance Weight—2 Oz.**		As req'd	
423039-5	**Balance Weight—2½ Oz.**		As req'd	
423039-6	**Balance Weight—3 Oz.**		As req'd	

FRONT BRAKES

FITTED FROM CHASSIS No. 98300 TO 98810 DF.316, 98750 TO 98758 DF.317

Part No.	Description	Plate No.	No. per Unit	Remarks
136017	**R.H. FRONT CALIPER ASSEMBLY (VB.421/A)**		1	
136017/01	**Front Caliper only** (VBM.517)	20—1	2	
6903	**Piston Assembly** (VBO.1992)	20—2	2	
6905	**Cylinder Block Assembly** (VBO.2024/B)	20—3	2	
6912	**Friction Pad** (VBO.645/F)	20—4	2	
7283	**Carrier Plate,** for Friction Pad (VBO.2087)	20—5	2	
7225	**Dust Seal,** behind Carrier Plate (VBO.485)	20—6	2	
6910	**Retractor Pin and Bush Assembly** (VBO.1942 & VBO.1932)	20—7	4	
6911	**Bleed Screw and Ball Assembly** (VBO.5114)	20—8	2	
6953	**R.H. Bridge Pipe Assembly** (VBO.2372)	20—9	1	
6913	**Bolt,** securing Cylinder to Caliper (VBO.1337)	20—10	8	
C.724	**Washer,** Shakeproof, on Bolts (1214)	20—11	8	
136018	**L.H. FRONT CALIPER ASSEMBLY (VB.421B)**		1	
6954	**L.H. Bridge Pipe Assembly** (VBO.2373)		1	
	All other items as for R.H. Front Caliper 136017			
C.13196	**Shim** (.005″ thick) for adjustment of Front Caliper (VBO.1331)	20—12	As req'd	
C.13197	**Shim** (.020″ thick) for adjustment of Front Calipers (VBO.1332)	20—12	As req'd	
430895	**Bolt,** securing Front Calipers to Front Adaptor		2	
431146	**Tab Washer,** on Bolt		1	
6903	**PISTON ASSEMBLY IN FRONT CYLINDERS (VBO.1992)**	20—2	4	
6916	**Seal,** on Piston (VBO.1122)	20—13	4	
6917	**Washer,** retaining Seal on Piston (VBO.1996)	20—14	4	
6915	**REPAIR KIT FOR FRONT WHEEL CYLINDERS (COMPRISING PISTON SEAL, PISTON WASHER, AND DUST SEAL)**		4	
307607	**ADAPTOR PLATE FOR R.H. FRONT CALIPER**	20—15	1	

FRONT BRAKES

FITTED FROM CHASSIS No. 98300 TO 98810 DF.316, 98750 TO 98758 DF.317

Part No.	Description	Plate No.	No. per Unit	Remarks
307608	**ADAPTOR PLATE FOR L.H. FRONT CALIPER**		1	
135971	**FRONT BRAKE DISC (VBM.877)**	20—16	2	
430897	**Bolt,** securing Front Brake Disc to Front Hub		10	
430241/07	**Washer,** Spring, on Bolt		10	
7328	**CEMENT FOR FIXING FRICTION PADS TO CARRIER PLATES**		1 Tube	

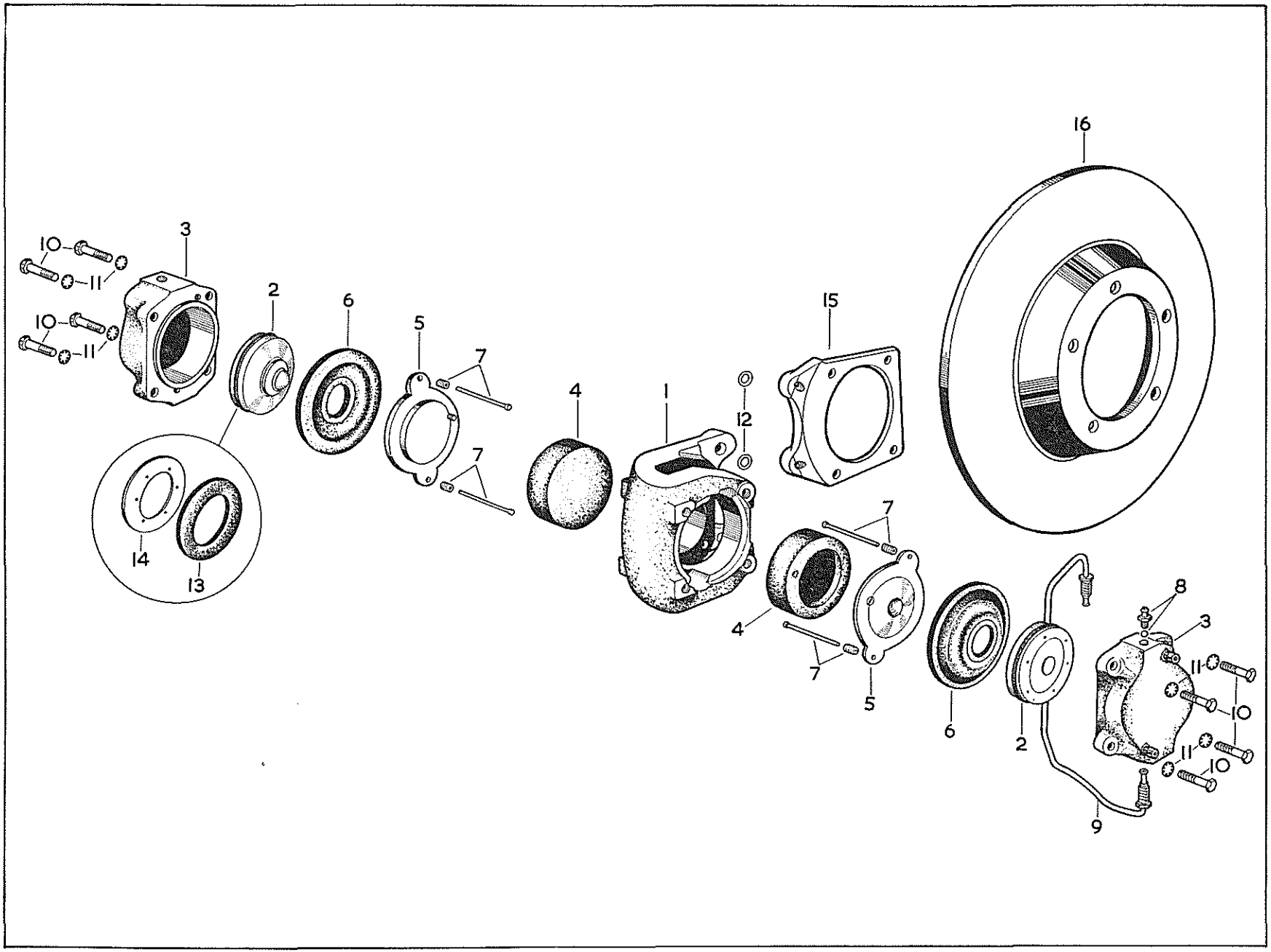

PLATE 20

REAR BRAKES

FITTED FROM CHASSIS No. 98300 TO 98810 DF.316, 98750 TO 98758 DF.317

Part No.	Description	Plate No.	No. per Unit	Remarks
136015	**R.H. REAR CALIPER ASSEMBLY (VB.426A)**		1	
6953	**R.H. Bridge Pipe Assembly** (VBO.2372)	21—1	1	
136015/01	**R.H. Rear Caliper only** (VBM.518)	21—2	1	
6912	**Friction Pad** (VBO.645F)	21—3	2	
7283	**Carrier Plate,** for Friction Pad (VBO.2087)	21—4	2	
7216	**Dust Seal,** behind Carrier Plate (VBO.484)	21—5	2	
7227	**Piston Assembly** (VBO.2029)	21—6	2	
7226	**Cylinder Block Assembly** (VBO.2024C)	21—7	2	
6910	**Retractor Pin and Bush Assembly** (VBO.1942 & VBO.1932)	21—8	4	
136015/26	**Protector** for Retractor Pin (VBO.5174)		4	
136015/21	**Bleed Screw and Ball Assembly** (VBO.237)	21—9	2	
6913	**Bolt,** securing Cylinder to Caliper (VBO.1337)	21—10	8	
C.724	**Washer,** Shakeproof, on Bolts (1214)	21—11	8	
136016	**L.H. REAR CALIPER ASSEMBLY (VB.426B)**		1	
6954	**L.H. Bridge Pipe Assembly** (VBO.2373)		1	
136016/01	**L.H. Rear Caliper, only** (VBM.519)		1	
	All other items as for Caliper Assembly 136015			
C.13198	**Shim** (.005″ thick), for adjustment of Rear Caliper (VBO.1333)		As req'd	
C.13199	**Shim** (.020″ thick), for adjustment of Rear Caliper (VBO.1334)		As req'd	
430896	**Bolt,** securing Rear Calipers		4	
431147	**Tab Washer,** on Bolts		2	
7227	**PISTON ASSEMBLY IN REAR CYLINDERS (VBO.2029)**	21—6	4	
7247	**Seal,** on Piston (VBO.1892)	21—12	4	
7246	**Washer,** retaining Seal on Piston (VBO.1891)	21—13	4	
7241	**REPAIR KIT FOR REAR WHEEL CYLINDER (COMPRISING PISTON SEAL. PISTON WASHER AND DUST SEAL)**		4	
136019	**R.H. HANDBRAKE MECHANISM ASSEMBLY (VBM.3099A)**	21—14	1	
136019/10	**R.H. Inner Pad Carrier Assembly** (VBM.3005A)	21—15	1	
136019/20	**R.H. Outer Pad Carrier Assembly** (VBM.3436A)	21—16	1	
136019/01	**Operating Lever Assembly** (VBO.3450)	21—17	1	
6927	**Bolt,** securing Pad Carrier to Operating Lever (VBO.2338)	21—18	1	
C.8667/2	**Locknut,** on Bolt (VBO.6056)	21—19	1	
6923	**Pivot Seat,** for Operating Lever (VBO.2350)	21—20	1	
6926	**Clevis Pin,** securing Operating Lever to Pivot Seat (VBO.1027)	21—21	1	
L.102/4U	**Split Pin,** retaining Clevis Pin	21—22	1	
422500/01	**Washer,** behind Split Pin	21—23	2	

REAR BRAKES

FITTED FROM CHASSIS No. 98300 TO 98810 DF.316, 98750 TO 98758 DF.317

Part No.	Description	Plate No.	No. per Unit	Remarks
136020	**L.H. HANDBRAKE MECHANISM ASSEMBLY (VBM.3099B)**		1	
136020/01	**L.H. Inner Pad Carrier Assembly** (VBM.3005B)		1	
136020/04	**L.H. Outer Pad Carrier Assembly** (VBM.3436B)		1	
	All other items as for Handbrake Mechanism Assembly 136019			
6925	**Bolt,** securing Handbrake Mechanism to Rear Calipers (VBO.662)	21—24	2	
6932	**Tab Washer,** on Bolt (VBO.2270)	21—25	2	
136019/23	**REPAIR KIT FOR HANDBRAKE MECHANISM (COMPRISING FRICTION PADS AND BIFURCATED RIVETS)**		2	
135975	**REAR BRAKE DISC (VBM.870)**	21—26	2	
430897	**Bolt,** securing Rear Disc to Rear Hub		10	
430241/07	**Washer,** Spring, on Bolts		10	
307616	**ADAPTOR PLATE FOR REAR CALIPERS**	21—27	2	

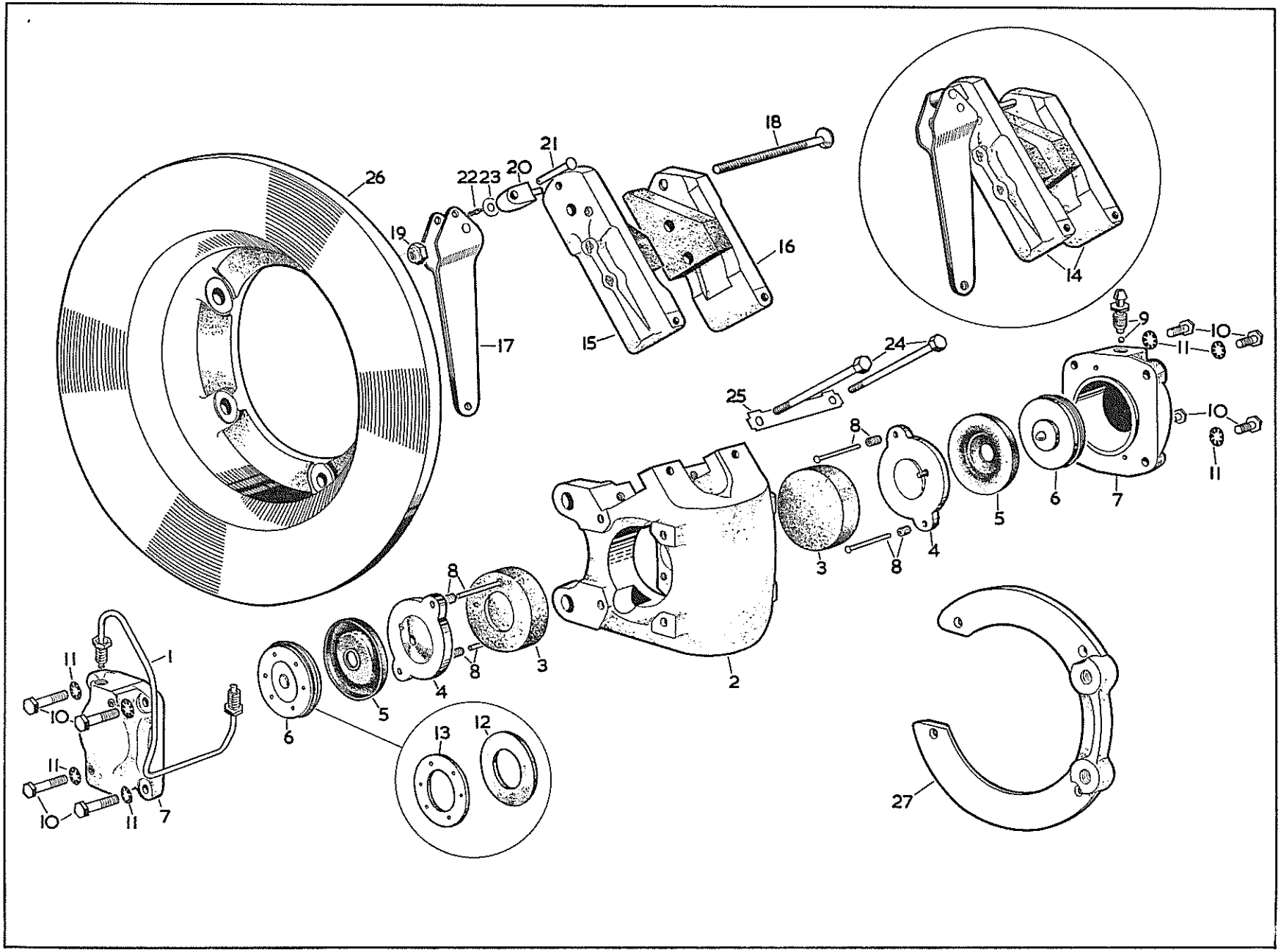
26
22
23
20
21
18
19
16
17
15
14
9
10
11
24
25
8
10
11
6
7
5
3
8
4
2
8
3
4
8
5
6
1
11
10
11
10
11
7
13
12
27

PLATE 21

FRONT BRAKES

FITTED TO CHASSIS No. 98811 AND SUBS. (DF.316), 98759 AND SUBS. (DF.317)
99300 AND SUBS. (DF.318), 99780 AND SUBS. (DF.319)

Part No.	Description	Plate No.	No. per Unit	Remarks
136176	**R.H. FRONT CALIPER ASSEMBLY (VB.1033A)**		1	
136176/02	**Front Caliper only** (VBM.1016)	22—1	1	
7937	**Friction Pad Assembly** (VBO.S138)	22—2	2	
7718	**Support Plate,** for Friction Pads (VBO.S133)	22—3	2	
7719	**Retaining Plate,** for Friction Pads (VBO.5123)	22—4	1	
UFB.125/7R	**Bolt,** securing Retaining Plate	22—5	1	
UFN.125/L	**Nut,** on Bolt	22—6	1	
C.724	**Washer,** Shakeproof, under Nut	22—7	1	
7841	**Piston Assembly** (VBO.5244)	22—8	2	
7843	**Cylinder Assembly** (VBO.5224)	22—9	2	
7720	**Bolt,** securing Cylinder to Caliper (VBO.5100)	22—10	8	
C.724	**Washer,** Shakeproof, on Bolts (1214)	22—11	8	
6911	**Bleed Screw and Ball Assembly** (VBO.5114)	22—12	1	
7783	**R.H. Bridge Pipe Assembly** (VBO.5203)	22—13	1	
136177	**L.H. FRONT CALIPER ASSEMBLY (VB.1033B)**		1	
7822	**L.H. Bridge Pipe Assembly** (VBO.5204)		1	
	All other items as for R.H. Front Caliper 136176			
C.13196	**Shim** (.005″ thick), for adjustment of Front Calipers (VBO.1331)	22—14	As req'd	
C.13197	**Shim** (.020″ thick) for adjustment of Front Calipers (VBO.1332)	22—14	As req'd	
430895	**Bolt,** securing Front Calipers to Front Adaptor Plate		2	
431146	**Tab Washer,** on Bolt		1	
7841	**PISTON ASSEMBLY IN FRONT CYLINDERS (VBO.5244)**	22—8	4	
7844	**Piston Sub Assembly** (VBO.5034)	22—15	4	
7726	**Retractor Bush** (VBO.5135)	22—16	4	
6916	**Piston Seal** (VBO.1122)	22—17	4	
7845	**Plate,** retaining Piston Seal (VBO.5210)	22—18	4	
AS504/2D	**Screw,** C/sk. Hd. (VBO.6004)	22—19	8	
8303	**Washer,** Shakeproof, on Screws (VBO.6100)	22—20	8	
7844	**PISTON SUB-ASSEMBLY FOR FRONT CYLINDERS (VBO.5034)**	22—15	4	
7225	**Dust Seal** (VBO.485)		4	
7727	**REPAIR KIT FOR FRONT WHEEL CYLINDERS (JA.10) (COMPRISING PISTON SEAL AND DUST SEAL)**		4	

FRONT BRAKES

FITTED TO CHASSIS No. 98811 AND SUBS. (DF.316), 98759 AND SUBS. (DF.317) 99300 AND SUBS. (DF.318), 99780 AND SUBS. (DF.319)

Part No.	Description	Plate No.	No. per Unit	Remarks
7840	**PISTON RETRACTION TOOL FOR USE WHEN RENEWING FRICTION PADS**		1	
135971	**FRONT BRAKE DISC (VBM.877)**	22—21	1	
430897	**Bolt,** securing Front Brake Disc to Front Hub		10	
430241/07	**Washer,** Spring, on Bolt		10	
307607	**ADAPTOR PLATE FOR R.H. FRONT CALIPER**	22—22	1	
307608	**ADAPTOR PLATE FOR L.H. FRONT CALIPER**		1	

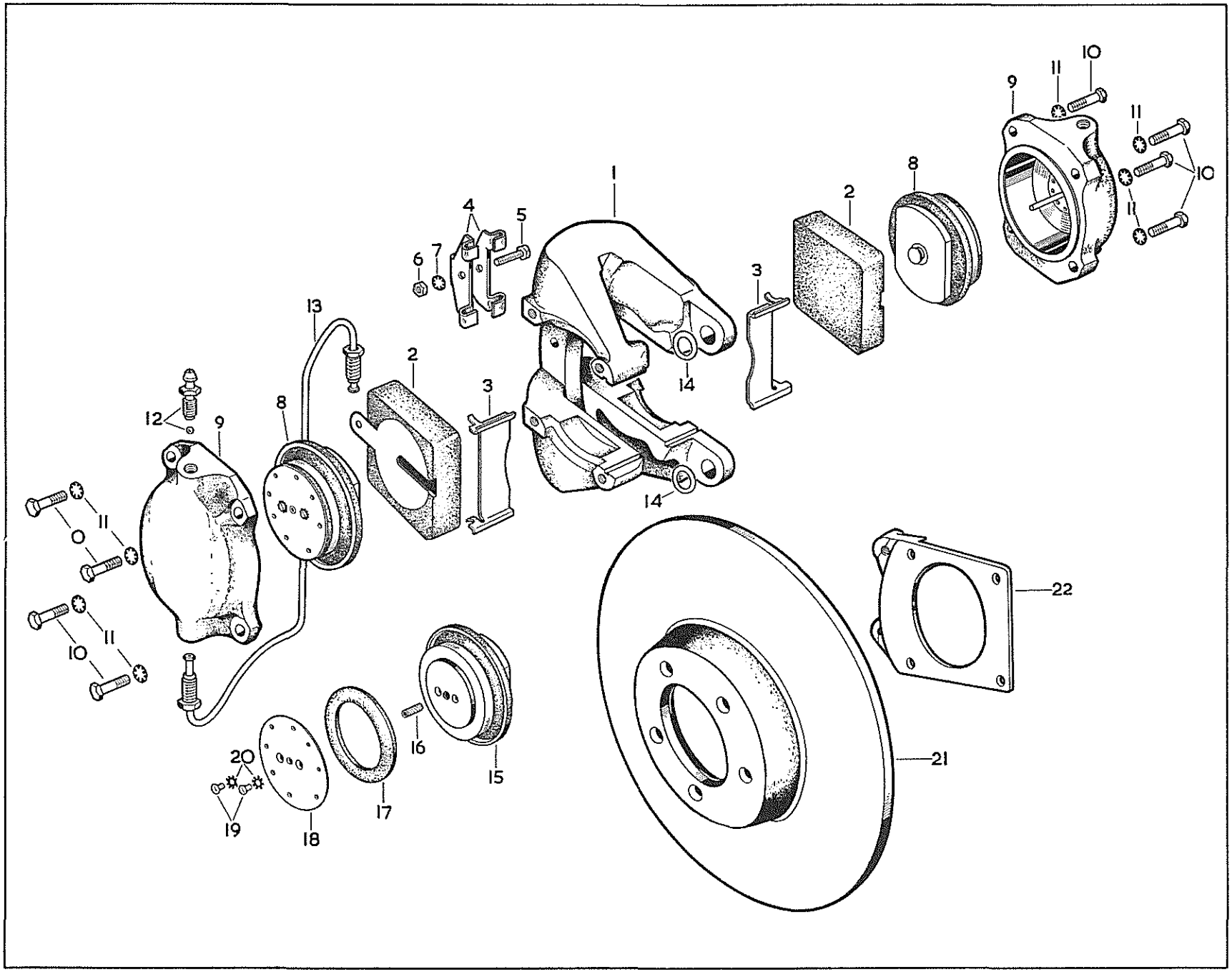

PLATE 22

REAR BRAKES

**FITTED TO CHASSIS No. 98811 AND SUBS. (DF.316), 98759 AND SUBS. (DF.317)
99300 AND SUBS. (DF.318), 99780 AND SUBS. (DF.319)**

Part No.	Description	Plate No.	No. per Unit	Remarks
136178	**R.H. REAR CALIPER ASSEMBLY (VB.1031A)**		1	Fitted to Chassis No. 98811 and subs. DF.316 98759 and subs. DF.317
7827	**R.H. Bridge Pipe Assembly** (VBO.3589)	23—1	1	
136178/01	**R.H. Rear Caliper Only** (VBM.1021)	23—2	1	
7937	**Friction Pad Assembly** (VBO.5138N)	23—3	2	
7718	**Support Plate,** for Friction Pads (VBO.5133)	23—4	2	
7719	**Retaining Plate,** for Friction Pads (VBO.5123)	23—5	1	
UFB.135/7R	**Bolt,** securing Retaining Plate	23—6	1	
UFN.125/L	**Nut,** on Bolt	23—7	1	
C.724	**Washer,** Shakeproof, under Nut	23—8	1	
7846	**Piston Assembly** (VBO.5245)	23—9	2	
7847	**Cylinder Assembly** (VBO.5225)	23—10	2	
7720	**Bolt,** securing Cylinders to Caliper (VBO.5100)	23—11	8	
C.724	**Washer,** Shakeproof, on Bolt (1241)	23—12	8	
6911	**Bleed Screw and Ball Assembly** (VBO.5114)	23—13	1	
136179	**L.H. REAR CALIPER ASSEMBLY (VB.1031B)**		1	Fitted to Chassis No. 98811 and subs. DF.316 98759 and subs. DF.317
7826	**L.H. Bridge Pipe Assembly** (VBO.3588)		1	
136179/01	**L.H. Rear Caliper only** (VBM.1023)		2	
	All other items, as for Caliper Assembly 136178			
136338	**R.H. REAR CALIPER ASSEMBLY (VB.1099A)**		1	Fitted to Chassis No. 99300 and subs. DF.318 99780 and subs. DF.319
136338/01	**R.H. Rear Caliper only** (VBO.1078)		1	
	All other items as for Caliper Assembly 136178			
136339	**L.H. REAR CALIPER ASSEMBLY (VB.1099B)**		1	Fitted to Chassis No. 99300 and subs. DF.318 99780 and subs. DF.319
136339/01	**L.H. Rear Caliper only** (VBO.1079)		1	
	All other items as for Caliper Assembly 136179			
C.13198	**Shim** (.005″ thick), for Adjustment of Rear Calipers (VBO.1331)		As req'd	
C.13199	**Shim** (.020″ thick) for Adjustment of Rear Calipers (VBO.1334)		As req'd	
430896	**Bolt,** securing Rear Calipers		2	
431147	**Tab Washer,** on Bolts		1	

FITTED TO CHASSIS No. 98811 AND SUBS. (DF.316), 98759 AND SUBS. (DF.317)
99300 AND SUBS. (DF.318), 99780 AND SUBS. (DF.319)

Part No.	Description	Plate No.	No. per Unit	Remarks
7846	**PISTON ASSEMBLY IN REAR CYLINDER (VBO.5245)**	23—9	4	
7848	**Piston Sub Assembly** (VBO.5235)	23—14	4	
7726	**Retractor Bush** (VBO.5135)	23—15	4	
7737	**Piston Seal** (VBO.5061)	23—16	4	
7849	**Plate,** retaining Piston Seal (VBO.5054)	23—17	4	
A.5504/22	**Screw,** C/sk. Hd. (VBO.6004)	23—18	8	
8303	**Washer,** Shakeproof, on Screws (VBO.6100)	23—19	8	
7848	**PISTON SUB-ASSEMBLY FOR REAR CYLINDERS (VBO.5235)**	23—14	4	
7616	**Dust Seal** (VBO.484)		4	
7728	**REPAIR KIT FOR REAR WHEEL CYLINDER (JA.11) (COMPRISING PISTON SEAL AND DUST SEAL)**		4	
136019	**R.H. HANDBRAKE MECHANISM ASSEMBLY (VBM.3099A)**		1	Fitted from Chassis No. 98811 to 98908 DF.316
136019/10	**R.H. Inner Pad Carrier Assembly** (VBM.3005A)		1	
136019/20	**R.H. Outer Pad Carrier Assembly** (VBM.3436A)		1	
136019/01	**Operation Lever Assembly** (VBO.3450)		1	
6927	**Bolt,** securing Pad Carrier to Operating Lever (VBO.2338)		1	
C.8667/2	**Locknut,** on Bolt (VBO.6056)		1	
6923	**Pivot Seat,** for Operating Lever (VBO.2350)		1	
6926	**Clevis Pin,** securing Operating Lever to Pivot Seat (VBO.1027)		1	
			1	
L.102/4U	**Split Pin,** retaining Clevis Pin		1	
422500/01	**Washer,** behind Split Pin		2	
136020	**L.H. HANDBRAKE MECHANISM ASSEMBLY (VBM.3099B)**		1	Fitted from Chassis No. 98811 to 98908 DF.316
136020/01	**L.H. Inner Pad Carrier Assembly** (VBM.3005B)		1	
136020/04	**L.H. Outer Pad Carrier Assembly** (VBM.3436B)		1	
	All other items as for Handbrake Mechanism Assembly 136019			
6925	**Bolt,** securing Handbrake Mechanism to Rear Calipers (VBO.662)		2	
6932	**Tab Washer,** on Bolt (VBO.2270)		2	

REAR BRAKES

FITTED TO CHASSIS No. 98811 AND SUBS. (DF.316), 98759 AND SUBS. (DF.317), 99300 AND SUBS. (DF.318), 99780 AND SUBS. (DF.319)

Part No.	Description	Plate No.	No. per Unit	Remarks
136019/23	**REPAIR KIT HANDBRAKE MECHANISM (COMPRISING FRICTION PADS AND BIFURCATED RIVETS)**		2	Fitted from Chassis No. 98811 to 98908
136213	**R.H. HANDBRAKE MECHANISM ASSEMBLY (VBM.3140A)**	23—20	1	Fitted to Chassis No. 98909 and subs. DF.316 98759 and subs. DF.317 99300 and subs. DF.318 99780 and subs. DF.319
136213/04	**R.H. Inner Pad Carrier Assembly** (VBM.3031A)	23—21	1	
136213/05	**R.H. Outer Pad Carrier Assembly** (VBO.4143A)	23—22	1	
136019/01	**Operating Lever Assembly** (VBO.3450)	23—23	1	
6927	**Bolt,** securing Pad Carrier to Operating Lever (VBO.2338)	23—24	1	
C.8667/2	**Locknut,** on Bolt (VBO.6056)	23—25	1	
6923	**Pivot Seat** (VBO.2350)	23—26	1	
8015	**Clevis Pin** (VBO.4182)	23—27	1	
L.102/4U	**Split Pin,** retaining Clevis Pin	23—28	1	
FW.104/T	**Washer,** behind Split Pin	23—29	1	
136214	**L.H. HANDBRAKE MECHANISM ASSEMBLY (VBM.3140B)**		1	Fitted to Chassis No. 98909 and subs. DF.316 98759 and subs. DF.317 99300 and subs. DF.318 99780 and subs. DF.319
136214/01	**L.H. Inner Pad Carrier Assembly** (VBM.3031B)		1	
136214/02	**L.H. Outer Pad Carrier Assembly** (VBO.4143B)		1	
	All other items as for Handbrake Mechanism Assembly 136213			
136213/01	**Bolt,** securing Handbrake Mechanism to Rear Calipers (VBO.3783)	23—30	2	Fitted to Chassis No. 98909 and subs. DF.316 98759 and subs. DF.317
6932	**Tab Washer,** on Bolt (VBO.2270)	23—31	1	
136213/03	**Retraction Plate,** on Bolt (VBM.3692/2)	23—32	1	
136341/02	**Bolt,** securing Pad Carrier (VBO.4190)		2	Fitted to Chassis No. 99300 and subs. DF.318 99780 and subs. DF.319
136341/03	**Tab Washer,** on Bolt (VBO.4225)		1	
136341/01	**Retractor Plate,** on Bolt (VBM.3764/2)		1	
136213/12	**REPAIR KIT FOR HANDBRAKE MECHANISM (COMPRISING FRICTION PADS AND FIXINGS)**		2	Fitted to Chassis No. 98909 and subs. DF.316 98759 and subs. DF.317 99300 and subs. DF.318 99780 and subs. DF.319
135975	**REAR BRAKE DISC (VBM.870)**	23—33	2	
430897	**Bolt,** securing Disc to Rear Hub		10	
430241/07	**Washer,** Spring, on Bolts		10	
307616	**REAR CALIPER ADAPTOR PLATE**	23—34	2	

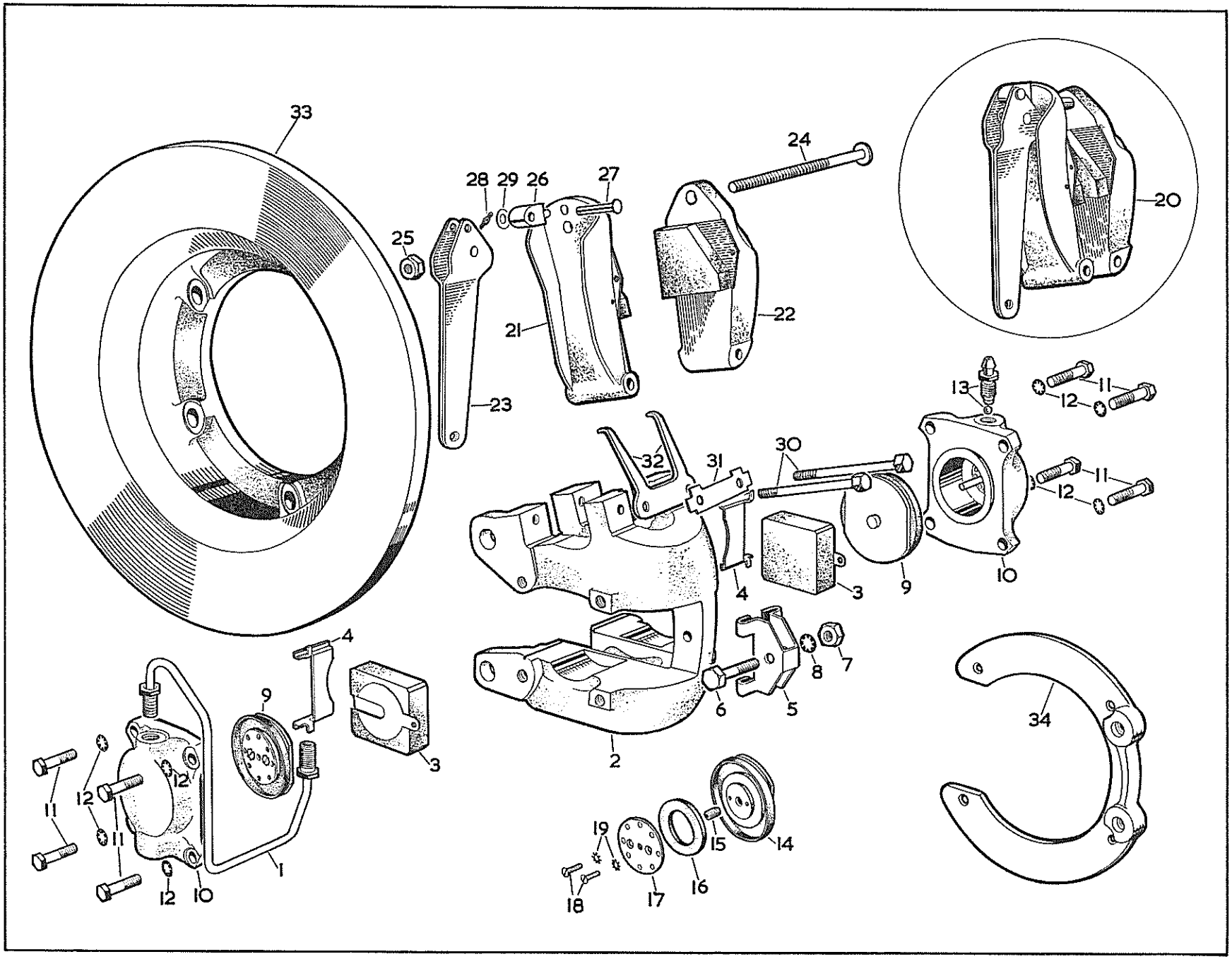
33
24
28
29
26
27
25
20
21
22
23
13
11
12
32
31
30
11
12
4
3
9
10
4
8
7
9
6
5
3
2
34
11
12
12
11
12
10
1
19
15
14
18
17
16

PLATE 23

BRAKE CONTROLS AND HYDRAULICS

Part No.	Description	Plate No.	No. per Unit	Remarks
430745	**BRAKE PEDAL ASSEMBLY**	24—1	1	**R.H. DRIVE CARS ONLY**
1012/11	**Bush,** for Pedal		2	
430990	**BRAKE PEDAL ASSEMBLY**		1	**L.H. DRIVE CARS ONLY**
1012/11	**Bush,** for Pedal		2	
427000	**Rubber Cover,** for Brake Pedal	24—2	1	
430744	**Fulcrum Pin,** for Brake Pedal	24—3	1	
422500/07	**Washer,** Plain, on Fulcrum Pin		2	
419514	**Spring,** for Brake Pedal Return	24—4	1	
422501/23	**Split Pin,** retaining Fulcrum Pin		2	
135993	**BRACKET, MOUNTING BRAKE PEDAL AND MASTER CYLINDER**		1	Fitted from Chassis No. 98300 to 98810
136053	**BRACKET, MOUNTING BRAKE PEDAL AND MASTER CYLINDER**	24—5	1	Fitted from Chassis No. 98811 and subs.
12104/07	**Screw,** Set, for adjusting Brake Pedal		1	
13204	**Locknut,** securing adjusting setscrew		1	
430746	**Distance Piece,** between Master Cylinder and Dash		1	
11105/18	**Bolt,** securing Master Cylinder and Distance Piece to Dash		2	
422514/06	**Nut,** Nyloc, on Bolt		2	
12104/0S	**Screw,** Set, securing Bracket to Dash		6	
13104	**Nut,** ¼" on Setscrew		6	
422500/01	**Washer,** Plain, under Nut		6	
430241/04	**Washer,** Spring, under Nut		6	
430934	**JAW, SECURING MASTER CYLINDER TO BRAKE PEDAL**	24—6	1	**Fitted to DF.316 Cars only**
431027	**JAW, SECURING MASTER CYLINDER TO BRAKE PEDAL**		1	**Fitted to DF.317, DF.318 and DF.319 Cars only**
13205	**Locknut,** on Push Rod	24—7	1	
422531/16	**Clevis Pin,** securing Jaw to Pedal	24—8	1	
422501/13	**Split Pin,** retaining Clevis Pin		1	
422500/02	**Washer,** Plain, under Split Pin		1	

BRAKE CONTROLS AND HYDRAULICS

Part No.	Description	Plate No.	No. per Unit	Remarks
308586	**BRAKE MASTER CYLINDER ASSEMBLY (VBM.4023)**	24—9	1	
7474	**Body only** (VBM.3236)	24—10	1	
8296	**Seal** on Valve (VBO.4842)	24—11	1	
7676	**Valve** (VBO.3539)	24—12	1	
6943	**Spring,** on Valve (VBO.1410)	24—13	1	
308568/02	**Spring Support,** between Spring and Valve (VBO.4141)	24—14	1	
8292	**Main Spring** (VBO.4767)	24—15	1	
6942	**Spring Support,** between Spring and Piston (VBO.2042)	24—16	1	
8293	**Cup Seal,** on Piston (VBO.4625)	24—17	1	
8291	**Piston** (VBO.4768)	24—18	1	
8294	**Static Seal,** on Piston (VBO.4623)	24—19	1	
307711/09	**Push Rod** (VBO.3103)	24—20	1	
6947	**Washer,** on Push Rod (VBO.1867)	24—21	1	
6948	**Circlip,** retaining Push rod in Cylinder Body (VBO.2048)	24—22	1	
6945	**Dust Excluder,** over end of Cylinder Body (VBO.1869)	24—23	1	
UFN.131/L	**Nut,** on Push Rod	24—24	1	
	NOTE: Individual Parts of Master Cylinder not supplied. Use Reconditioning Kit to service Master Cylinder			
8250	**MASTER CYLINDER RECONDITIONING KIT (VBO.4843)**		1	
307726	**BRAKE FLUID SUPPLY TANK ASSEMBLY (VBM.521)**	24—25	1	
431017	**Clip,** for Supply Tank	24—26	1	
422545/16	**Screw,** securing Clip		1	
430241/03	**Washer,** Spring, on Screw		1	
422543/2	**Nut,** on Screw		1	
430969	**AIR CLEANER FOR BRAKE VACUUM SERVO (94383/4)**	24—27	1	
430933	**Elbow,** between Air Cleaner and Servo	24—28	1	
422522/02	**Clip,** securing Elbow to Air Cleaner and Servo	24—29	2	
307663	**NON-RETURN VALVE (27547/4)**	24—30	1	
307663/01	**Piston,** for Non-Return Valve (27550)		1	
307663/02	**Seal,** for Piston (27552)		1	
307663/03	**Joint,** for Valve Body (27551)		1	
11104/06	**Bolt,** securing Non-Return Valve to Wing Valance		2	
422500/01	**Washer,** Plain, on Bolt		2	
430241/04	**Washer,** Spring, on Bolt		2	
13104	**Nut** on Bolt		2	

BRAKE CONTROLS AND HYDRAULICS

Part No.	Description	Plate No.	No. per Unit	Remarks
307681	**HOSE FROM BRAKE VACUUM SERVO TO NON-RETURN VALVE (70353/5¼")**	24—31	1	
422522/03	**Clip,** securing Hose to Banjo and Valve	24—32	2	
430976	**Banjo,** for connection of Hose to Brake Servo (89169/4)	24—33	1	
C.11356	**Gasket,** Copper, at each side of Banjo (KL.44526)	24—34	2	
431013	**Bolt,** securing Banjo (30352/4)	24—35	1	
307682	**HOSE FROM MANIFOLD TO NON-RETURN VALVE (70353/12¼")**	24—36	1	
430931	**Plug,** in Manifold for Hose	24—37	1	
422506/15	**Washer,** Copper and Asbestos under Plug	24—38	1	
422522/03	**Clip,** securing Hose to Plug	24—39	1	
945272	**IN-LINE NON-RETURN VALVE (994033)**		1	**Can be fitted in lieu of Non-Return Valve 307663**
432790	**HOSE FROM BRAKE VACUUM SERVO TO IN-LINE NON-RETURN VALVE**		1	**FOR USE ONLY WHEN IN-LINE VALVE (PART No. 945272) IS FITTED.**
422522/02	**Clip,** securing Hose		2	
432788	**Banjo,** for connection of Hose to Brake Servo (104819/4)		1	
C.11356	**Gasket,** Copper, at each side of Banjo (KL.44526)		2	
431013	**Bolt,** securing Banjo (30352/4)		1	
432789	**HOSE FROM MANIFOLD TO IN-LINE NON-RETURN VALVE**		1	**FOR USE ONLY WHEN IN-LINE VALVE (PART No. 945272) IS FITTED.**
426044	**Plug,** in Manifold for Hose		1	
422506/15	**Washer,** Copper and Asbestos, under Plug		1	
422522/02	**Clip,** securing Hose		2	
307704	**HYDRAULIC PIPE FROM SUPPLY TANK TO MASTER CYLINDER (VBO.3438)**	24—40	1	**R.H. DRIVE CARS ONLY**
307705	**HYDRAULIC PIPE FROM SUPPLY TANK TO MASTER CYLINDER (VBO.3563)**		1	**L.H. DRIVE CARS ONLY**

BRAKE CONTROLS AND HYDRAULICS

Part No.	Description	Plate No.	No. per Unit	Remarks
307703	**HYDRAULIC PIPE FROM MASTER CYLINDER TO SERVO (VBO.3439)**	24—41	1	**R.H. DRIVE CARS ONLY**
136008	**HYDRAULIC PIPE FROM MASTER CYLINDER TO SERVO (VBO.3564)**		1	**L.H. DRIVE CARS ONLY**
136007	**HYDRAULIC PIPE FROM SERVO TO 5-WAY UNION (VBO.3440)**	24—42	1	
C.13179	**5-WAY UNION (VBO.1335)**	24—43	1	
12104/10	**Screw,** Set, securing 5-Way Union to Frame		1	
430241/04	**Washer,** Spring, on Setscrew		1	
13104	**Nut,** on Bolt		1	
427583	**STOP LIGHT SWITCH IN 5-WAY UNION (HL.2)**	24—44	1	
307676	**HYDRAULIC PIPE FROM 5-WAY UNION TO R.H. FRONT BRAKE HOSE (VBO.3442)**	24—45	1	**Fitted to DF.316/7 only**
136001	**HYDRAULIC PIPE FROM 5-WAY UNION TO L.H. FRONT BRAKE HOSE (VBO.3441)**	24—46	1	

BRAKE CONTROLS AND HYDRAULICS

Part No.	Description	Plate No.	No. per Unit	Remarks
308465	**HYDRAULIC PIPE FROM 5-WAY UNION TO R.H. FRONT BRAKE HOSE (VBO.7108)**		1	**Fitted to DF.318/9 only**
136343	**HYDRAULIC PIPE FROM 5-WAY UNION TO L.H. FRONT BRAKE HOSE (VBO.4566)**		1	
425456	**Clip,** securing Pipes to Frame Bracket	24—47	4	**Fitted to DF.316/7 only**
422544/9	**Bolt,** securing Clip		4	
422543/2	**Nut,** on Bolt		4	
430241/03	**Washer,** Spring, under Nut		4	
425456	**Clip,** securing Pipes		3	**Fitted to DF.318/9 only**
422545/13	**Bolt,** securing Clips		3	
430241/03	**Washer,** Spring, on Bolts		3	
C.13182	**FRONT BRAKE HOSE (WDO.21682)**	24—48	2	
13206	**Nut,** securing Hose to Frame and Front Suspension		4	
430241/06	**Washer,** Spring under Nut		4	
307674	**HYDRAULIC PIPE FROM R.H. FRONT BRAKE HOSE TO CALIPER (VBO.3447)**	24—49	1	
307673	**HYDRAULIC PIPE FROM L.H. FRONT BRAKE HOSE TO CALIPER (VBO.3448)**	24—50	1	
136002	**HYDRAULIC PIPE FROM 5-WAY UNION TO PIPE CONNECTOR (VBO.3443)**	24—51	1	
C.13187	**CONNECTOR FOR HYDRAULIC PIPES (VBO.1766)**	24—52	1	

BRAKE CONTROLS AND HYDRAULICS

Part No.	Description	Plate No.	No. per Unit	Remarks
136003	**HYDRAULIC PIPE FROM CONNECTOR TO REAR FLEXIBLE HOSE (VBO.3444)**	24—53	1	
425456	**Clip,** securing Hydraulic Pipes to Frame	24—47	7	
422544/9	**Bolt,** securing Clips		7	
422543/2	**Nut,** on Bolt		7	
430241/03	**Washer,** Spring, under Nut		7	
C.13188	**REAR FLEXIBLE BRAKE HOSE FROM PIPE TO 3-WAY UNION ON REAR AXLE BRACKET (WDO.20941)**	24—54	1	
13206	**Nut,** securing Rear Hose to Bracket on Chassis Frame		1	
430241/06	**Washer,** Spring, on Nut		1	
425167	**3-WAY UNION ON REAR AXLE (VBO.1227)**	24—55	1	
425147	**Copper Washer,** at connection of Rear Hose to 3-way Union		1	
12105/06	**Screw,** Set, securing 3-way Union to Rear Axle Bracket		1	
13105	**Nut,** on Setscrew		1	
430241/05	**Washer,** Spring, under Nut		1	
307679	**HYDRAULIC PIPE FROM 3-WAY UNION TO R.H. REAR CALIPER (VBO.3446)**	24—56	1	
136004	**HYDRAULIC PIPE FROM 3-WAY UNION TO L.H. REAR CALIPER (VBO.3445)**	24—57	1	
302454/15	**Clip,** securing Hydraulic Pipes to Rear Axle	24—58	3	

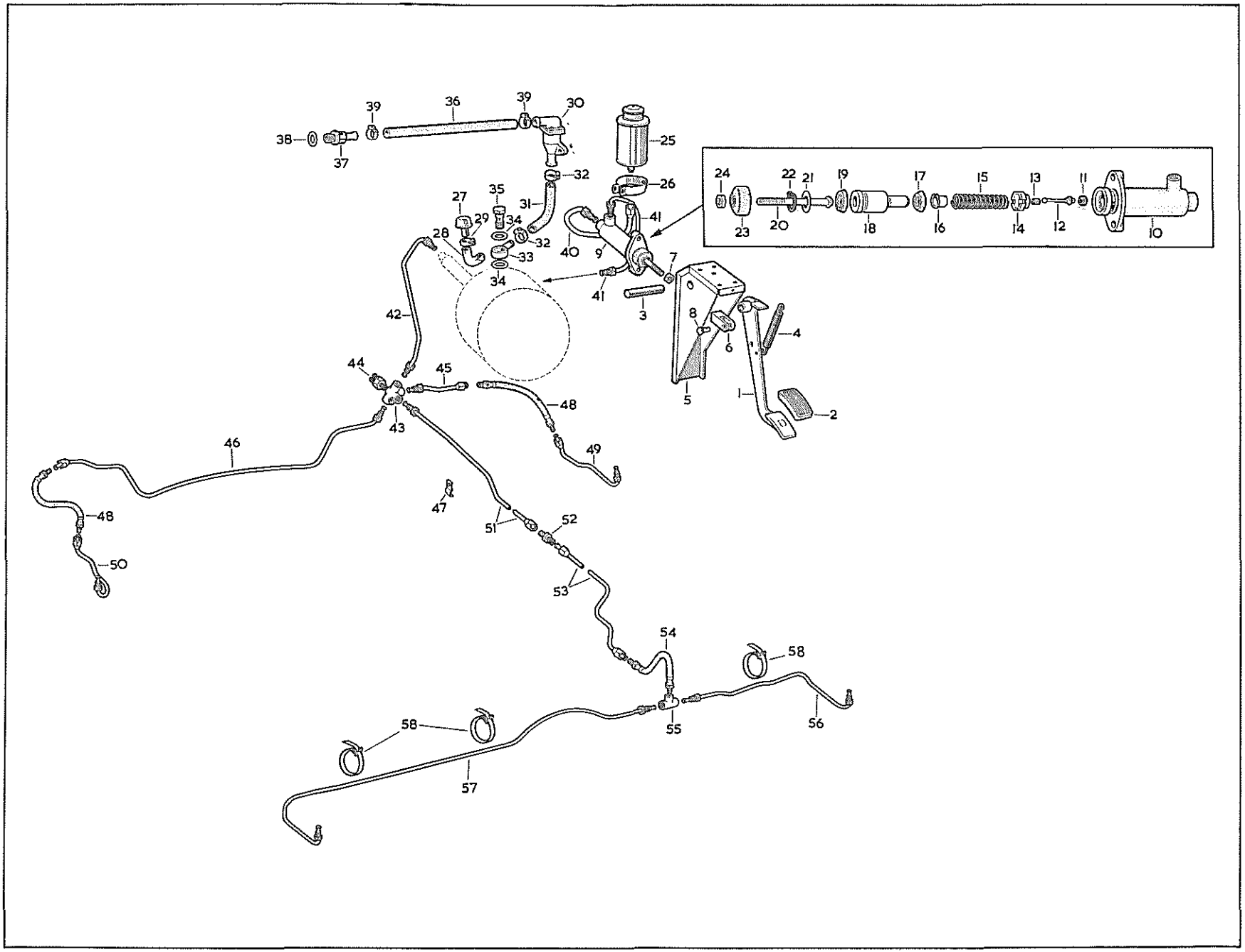
38
37
39
36
39
30
25
32
26
27
35
31
29
34
41
28
32
40
9
7
33
34
41
3
42
8
6
4
44
45
5
1
48
2
43
46
49
47
48
51
52
50
53
54
58
55
56
58
57

PLATE 24

$6\frac{7}{8}''$ BRAKE VACUUM SERVO

Part No.	Description	Plate No.	No. per Unit	Remarks
C.12937	**$6\frac{7}{8}''$ BRAKE VACUUM SERVO ASSEMBLY (91504)**		1	
AS.302/4H	**Screw,** securing Cover to Valve Housing (K.14303/R.P.)	25—1	8	
7139	**Cover and Valve Assembly** (88803)	25—2	1	
7163	**Return Spring,** for Diaphragm (89832)	25—3	1	
7160	**Gasket,** between Cover and Diaphragm (88718)	25—4	1	
7138	**Diaphragm Assembly** (88709)	25—5	1	
7160	**Gasket,** between Diaphragm and Valve Housing (88718)	25—6	1	
7167	**Balance Spring,** under Diaphragm (88734)	25—7	1	
UFS.125/4R	**Screw,** Set, securing Valve Housing to Slave Cylinder Body (K.23502/R.P.)	25—8	4	
C.739	**Washer,** Shakeproof, on Setscrews (K.1940S)	25—9	4	
7169	**Valve Housing** (88805)	25—10	1	
C.738	**Washer,** Shakeproof, under Nuts (K.19404)	25—11	8	
AN.102/L	**Nut,** on Screws, securing Valve Cover (K.18604/R.P.)	25—12	8	
7168	**Gasket,** between Valve Housing and Slave Cylinder (88801)	25—13	1	
7161	**Valve Piston** (88719)	25—14	1	
6364	**Seal,** for Valve Piston (81747)	25—15	1	
6383	**Gasket,** between Slave Cylinder Body and Main Cylinder (32737)	25—16	1	
UFS.125/4R	**Bolt** (Short), securing Cover to Main Cylinder (K.23502/R.P.)	25—17	3	
UFS.125/9R	**Bolt** (Long), securing Cover to Main Cylinder and for Mounting of Servo Unit (K.23508/R.P.)	25—18	3	
7754	**Tab Washer,** locking Long Bolts (99361)	25—18A	3	
UFN.125/L	**Nut,** on Bolts (K.2400/R.P.)	25—19	6	
C.739	**Washer,** Shakeproof, under Nuts (K.19405)	25—20	6	
7159	**Hose,** connecting Main Cylinder to Valve Cover (88199)	25—21	1	
7170	**Return Spring,** for Main Cylinder Piston (88806)	25—22	1	
7145	**Push Rod,** operating Main Cylinder Piston (86753)	25—23	1	
7691	**Adjusting Nut,** on Piston (88023)	25—24	1	
7273	**Locating Washer,** for Adjusting Nut (88022)	25—25	1	
7692	**Outer Piston Plate,** in Main Cylinder (88731)	25—26	1	
7142	**'O' Ring,** between Piston Plates, on Adjuster Nut (25844)	25—27	1	
8385	**Rubber Cup,** for Main Cylinder Piston (107149)	25—28	1	
7693	**Inner Piston Plate,** in Main Cylinder (88732)	25—29	1	**May be obtained as a Complete Assembly, to Part No. 7146 (88799)**
7143	**Piston Ring,** in Main Cylinder (82138)	25—30	1	
7141	**Wick,** around Piston Ring (25835/21.25")	25—31	1	
7694	**End Stop,** for Main Cylinder Piston (88733)	25—32	1	
FW.108/T	**Washer,** Plain, under Shakeproof Washer (K.20809)	25—33	1	
C.743	**Washer,** Shakeproof, under Nut	25—34	1	
UFN.150/L	**Nut,** securing Main Piston Assembly	25—35	1	
2538	**Copper Gasket,** under Nut (KL.44509)	25—36	1	
UFN.125/L	**Nut,** on Push Rod (K.24101)	25—37	1	
7140	**Cover and Pipe,** for Main Cylinder (88798)	25—38	1	
7158	**Gasket,** between Cover and Main Cylinder (87842)	25—39	1	
UF5.131/6R	**Screw,** Set, securing Abutment Plate inside Main Cylinder (K.23603)	25—40	4	
6386	**Plate,** locking Setscrews (82454)	25—41	2	
6385	**Abutment Plate,** inside Main Cylinder (32739)	25—42	1	
7137	**Main Vacuum Cylinder** (88807)	25—43	1	
6382	**Spigot,** for Slave Cylinder Piston (32736)	25—44	1	
7164	**Spring** (Short), between Seal at Rear of Distance Piece (92954)	25—45	1	
6402	**Seal,** between Spring and Spigot (85946)	25—46	1	
7896	**Spreader,** for Seal (90860)	25—47	1	
6444	**Circlip,** locating Short Spring (86158)	25—48	1	
7171	**Washer,** behind Distance Piece (96462)	25—49	1	
7165	**Distance Piece,** between Piston and Washer (97266)	25—50	1	
6380	**Piston,** for Slave Cylinder (82601)	25—51	1	
6379	**Seal,** between Piston and Spring Guide (92328)	25—52	1	
7157	**Guide,** for Main Spring in Slave Cylinder (85573)	25—53	1	
7156	**Main Spring,** in Slave Cylinder (91861)	25—54	1	
C.11356	**Copper Gasket,** sealing Adaptor in end of Slave Cylinder (KL.44526)	25—55	1	
7166	**Adaptor,** in end of Slave Cylinder (88728)	25—56	1	
7155	**Slave Cylinder Body** (88764)	25—57	1	

$6\frac{7}{8}''$ BRAKE VACUUM SERVO

Part No.	Description	Plate No.	No. per Unit	Remarks
8055	**REPAIR KIT FOR SLAVE CYLINDER ON BRAKE VACUUM SERVO (KL.72548)**		1	
8415	**REPAIR KIT FOR MAIN CYLINDER PISTON (KL.72565)**		1	
7149	**REPAIR KIT FOR AIR CONTROL VALVE (KL.72528)**		1	
135994	**BRACKET, MOUNTING BRAKE VACUUM SERVO**		1	
430942	**Packing Piece** (Rubber), between Bracket and Wing Valance		1	
11104/05	**Bolt,** securing Bracket to Wing Valance		3	
422514/05	**Nut,** Nyloc, on Bolt		3	
422500/01	**Washer,** Plain, under Nut		3	
430936	**Steady Clip,** on Slave Cylinder Body		1	
430935	**Steady Bracket,** between Steady Clip and Wing Valance		1	
11104/06	**Bolt,** securing Clip to Steady Bracket		1	
422514/05	**Nut,** Nyloc, on Bolt		1	
430937	**Packing Piece** (Rubber), between Steady Bracket and Wing Valance		1	
11104/05	**Bolt,** securing Steady Bracket to Wing Valance		2	
422514/05	**Nut,** Nyloc, on Bolt		2	
422500/01	**Washer,** Plain, under Nut		2	
135997/14	**Nut,** securing Vacuum Servo to Mounting Bracket		3	
135997/15	**Washer,** Shakeproof, under Nut		3	

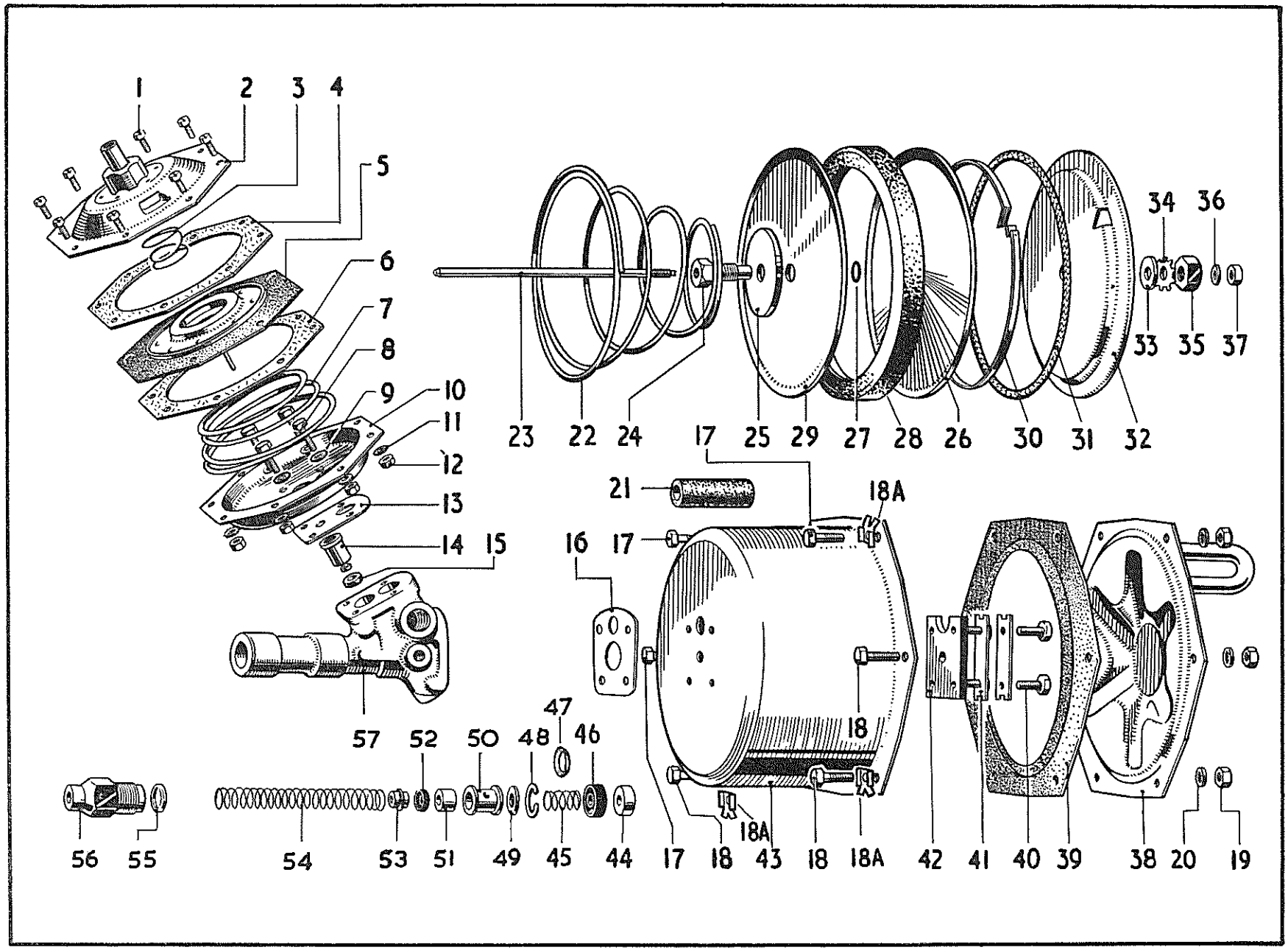
1
2
3
4
5
6
7
8
9
10
11
12
13
14
15
16
17
18
18A
19
20
21
22
23
24
25
26
27
28
29
30
31
32
33
34
35
36
37
38
39
40
41
42
43
44
45
46
47
48
49
50
51
52
53
54
55
56
57

PLATE 25

HANDBRAKE CONTROLS

FITTED FROM CHASSIS No. 98300 TO 98489

Part No.	Description	Plate No.	No. per Unit	Remarks
135977	**HANDBRAKE LEVER ASSEMBLY**	26—1	1	
135977/05	**Trigger and Pawl Spring** (P.89833)		1	
135977/06	**Pawl** (P.109217)		1	
135977/07	**Fulcrum Screw,** for Pawl (P.101084)		1	
135977/08	**Nut,** for Fulcrum Pin (P.101198)		1	
135977/09	**Washer,** Spring, on Screw (2007)		1	
307657/1	**FRONT HANDBRAKE CABLE ASSEMBLY CONNECTING HANDBRAKE LEVER TO HANDBRAKE ROD LEVER**	26—2	1	
431012	**Spacer,** on Handbrake Cable Bolt	26—3	1	
422514/05	**Nut,** Nyloc, securing Cable to Handbrake Lever		1	
422500/01	**Washer,** Plain, under Nut		1	
422531/16	**Clevis Pin,** securing Cable to Handbrake Rod Lever	26—4	1	
422500/02	**Washer,** Plain, on Clevis Pin		1	
422501/13	**Split Pin,** retaining Clevis Pin		1	
307648	**BRACKET FOR HANDBRAKE ROD LEVER ON FRAME**	26—5	1	
12105/06	**Screw,** Set, securing Bracket to Frame		4	
13105	**Nut,** on Setscrews		4	
430241/05	**Washer,** Spring, on Setscrew		4	
430916	**HANDBRAKE ROD LEVER ASSEMBLY**	26—6	1	
0810/12	**Bush,** for Lever		1	
430915	**Shaft,** for Handbrake Rod Lever	26—7	1	
13306	**Nut,** Slotted on Shaft		1	
422500/03	**Washer,** Plain, on Shaft		1	
422501/07	**Split Pin**		1	
430917	**HANDBRAKE ROD, CONNECTING HANDBRAKE ROD LEVER TO HANDBRAKE ROD PENDULUM**	26—8	1	
422529/1	**Fork End,** for Front End of Brake Rod	26—9	1	
420919	**Eye End,** for Rear End of Brake Rod	26—10	1	
13105	**Locknut,** securing Fork End and Eye End	26—11	2	
422531/17	**Clevis Pin,** securing Front Fork End to Handbrake Rod Lever	26—12	1	
422531/25	**Clevis Pin,** securing Rear End Eye to Handbrake Rod Pendulum	26—13	1	
422501/02	**Washer,** Plain, on Clevis Pin		2	
422501/13	**Split Pin,** retaining Clevis Pin		2	
430971	**Grommet,** Rubber, in Frame		2	

HANDBRAKE CONTROLS

FITTED FROM CHASSIS No. 98300 TO 98489

Part No.	Description	Plate No.	No. per Unit	Remarks
307766	**BELL CRANK LEVER ASSEMBLY**	26—14	1	
0810/12	**Bush,** for Lever		2	
430469	**Spring,** returning Bell Crank Lever	26—15	1	
430972	**BRAKE ROD (SHORT) CONNECTING BELL CRANK LEVER TO OPERATING LEVER ON R.H. HANDBRAKE MECHANISM**	26—16	1	
430973	**BRAKE ROD (LONG) CONNECTING BELL CRANK LEVER TO OPERATING LEVER ON L.H. HANDBRAKE MECHANISM**	26—17	1	
422529/01	**Fork** End, on Brake Rod	26—18	2	
13105	**Nut,** securing Fork Ends	26—19	2	
422531/16	**Clevis Pin,** securing Fork Ends to Bell Crank Lever and Levers on Handbrake Mechanism	26—20	4	
422501/15	**Split Pin,** retaining Clevis Pin		4	
277152	**Washer,** Spring, Bronze, under Split Pins		4	
307649	**REAR ABUTMENT BRACKET ON FRAME**	26—21	1	
12105/06	**Screw,** Set, securing Rear Abutment Bracket to Frame		4	
13105	**Nut,** on Setscrew		4	
420241/05	**Washer,** Spring, on Setscrew		4	
430920	**HANDBRAKE ROD PENDULUM**	26—22	1	
422531/24	**Clevis Pin,** securing Pendulum to Bracket	22—23	1	
422500/02	**Washer,** Plain, on Clevis Pin		1	
422501/13	**Split Pin,** retaining Clevis Pin		1	
307660/1	**REAR HANDBRAKE CABLE ASSEMBLY CONNECTING HANDBRAKE ROD PENDULUM TO BELL CRANK LEVER**	26—24	1	
422531/22	**Clevis Pin,** securing Rear Handbrake Cable to Bell Crank Lever	26—25	1	
422500/02	**Washer,** Plain, on Clevis Pin		1	
422501/13	**Split Pin,** retaining Clevis Pn		1	

HANDBRAKE CONTROLS

FITTED FROM CHASSIS No. 98300 TO 98489

Part No.	Description	Plate No.	No. per Unit	Remarks
423058	**BELL CRANK LEVER SWIVEL ASSEMBLY**	26—26	1	
0810/12	**Bush,** for Swivel		2	
13306	**Nut,** Slotted, securing Swivel to Bell Crank		1	
422501/07	**Split Pin,** retaining Nut		1	
422500/03	**Washer,** Plain, under Slotted Nut		1	
426018	**Swivel Pin**	26—27	1	
422500/05	**Washer,** Plain, on Swivel Pin		2	
13308	**Nut,** Slotted, on Swivel Pin		1	
422501/16	**Split Pin,** retaining Nut		2	

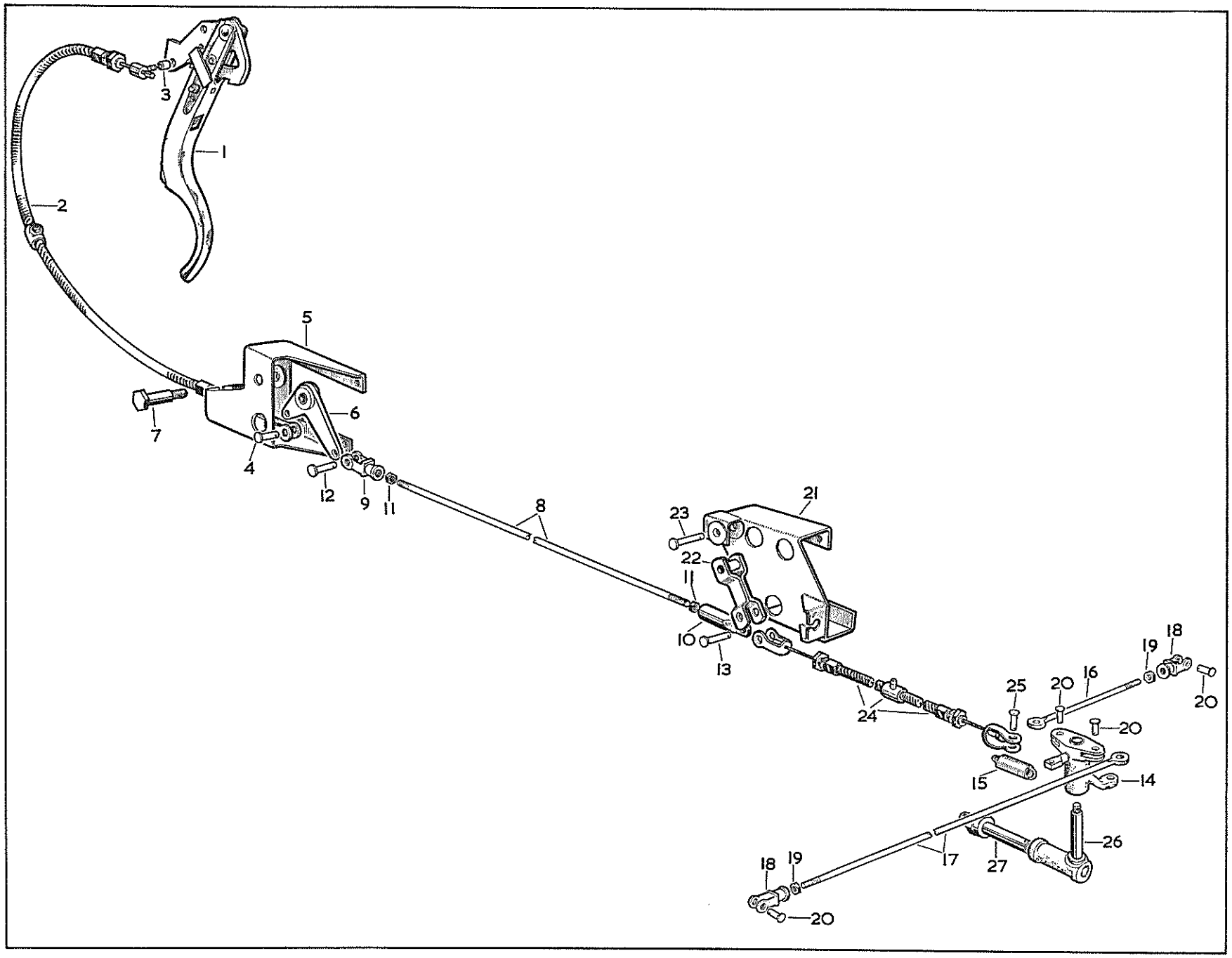

PLATE 26

HANDBRAKE CONTROLS

FITTED TO CHASSIS No. 98490 AND SUBS. (DF.316), 99300 AND SUBS. (DF.318)

Part No.	Description	Plate No.	No. per Unit	Remarks
136062	**HANDBRAKE LEVER ASSEMBLY**	27—1	1	
135977/05	**Trigger and Pawl Spring** (P.89833)		2	
135977/06	**Pawl** (P.109217)		1	
135977/07	**Fulcrum Screw,** for Pawl (P.101084)		1	
135977/08	**Nut,** for Fulcrum Screw (P.101198)		1	
135977/09	**Washer,** Spring, on Screw (2007)		1	
307769/1	**HANDBRAKE CABLE ASSEMBLY, CONNECTING HANDBRAKE LEVER TO HANDBRAKE ROD LEVER**	27—2	1	
422531/16	**Clevis Pin,** securing Handbrake Cable to Handbrake Lever and to Handbrake Rod Lever	27—3	2	
431123	**Washer,** on Handbrake Lever Clevis Pin		1	
422500/02	**Washer,** on Brake Rod Lever Clevis Pin		1	
422501/13	**Split Pin,** retaining Clevis Pin		2	
136060	**BRACKET FOR HANDBRAKE ROD LEVER ON FRAME**	27—4	1	
12105/06	**Screw,** Set, securing Bracket to Frame		3	
13105	**Nut,** on Setscrew		3	
420241/05	**Washer,** Spring, on Screw		3	
431117	**HANDBRAKE ROD LEVER ASSEMBLY**	27—5	1	
0810/12	**Bush,** for Lever		1	
430915	**Shaft,** for Handbrake Rod Lever	27—6	1	
13306	**Nut,** Slotted on Shaft		1	
422501/07	**Split Pin,** retaining Nut		1	
422500/03	**Washer,** Plain, on Shaft		1	
422166/11	**HANDBRAKE ROD, CONNECTING HANDBRAKE ROD LEVER TO BRAKE IDLER LEVER**	27—7	1	
422529/1	**Fork End,** for Front End of Brake Rod	27—8	1	
431114	**Eye End,** for Rear End of Brake Rod	27—9	1	
13105	**Lock Nut,** securing Fork End and Eye End	27—10	2	
422531/17	**Clevis Pin,** securing Fork End to Handbrake Rod Lever	27—11	1	
422531/18	**Clevis Pin,** securing Eye End to Brake Idler Lever	27—12	1	
422501/13	**Split Pin,** retaining Clevis Pin		2	
422500/02	**Washer,** Plain, on Clevis Pins		2	
423179/4	**Grommet,** in Frame		2	**Fitted to DF.316 only**
417488	**Grommet,** in Frame		1	**Fitted to DF.318 only**
432721	**Grommet,** in Frame		1	

HANDBRAKE CONTROLS

FITTED TO CHASSIS No. 98490 AND SUBS. (DF.316), 99300 AND SUBS. (DF.318)

Part No.	Description	Plate No.	No. per Unit	Remarks
431120	**BRAKE IDLER LEVER ASSEMBLY**	27—13	1	
1012/16	**Bush,** for Lever		1	
307784	**Shaft,** for Idler Lever	27—14	1	
422514/09	**Nut,** Nyloc, securing Shaft		1	
13308	**Nut,** Slotted, securing Idler Lever to Shaft		1	
422500/05	**Washer,** Plain under Nut		1	
422501/17	**Split Pin,** retaining Nut		1	
422166/3	**BRAKE ROD, CONNECTING BRAKE IDLER LEVER TO REAR IDLER LEVER**	27—15	1	
422529/1	**Fork End,** on Brake Rod	27—16	2	
13105	**Locknut,** securing Fork Ends	27—17	2	
423001	**REAR IDLER LEVER ASSEMBLY**	27—18	1	
422531/20	**Clevis Pin,** securing Rear Idler Lever to Axle	27—19	1	
422531/19	**Clevis Pin,** securing Brake Rod and Link to Rear Idler Lever	27—20	1	
422501/13	**Split Pin,** retaining Clevis Pin		2	
422500/02	**Washer,** Plain, under Split Pin		2	
423060	**REAR BRAKE LINK**	27—21	1	
422531/17	**Clevis Pin,** securing Link to Bell Crank Lever	27—22	1	
422501/13	**Split Pin,** retaining Clevis Pin		1	
422500/02	**Washer,** Plain, under Split Pin		1	
423058	**BELL CRANK LEVER SWIVEL ASSEMBLY**	27—23	1	
0810/12	**Bush,** for Swivel		2	
13306	**Nut,** Slotted		1	
422501/07	**Split Pin,** retaining Nut		1	
422500/03	**Washer,** Plain, under Nut		1	
423059	**Swivel Pin**	27—24	1	
422500/05	**Washer,** Plain, on Swivel Pin		2	
13308	**Nut,** Slotted, on Swivel Pin		1	
422501/16	**Split Pin,** retaining Nut		2	

HANDBRAKE CONTROLS

FITTED TO CHASSIS No. 98490 AND SUBS. (DF.316), 99300 AND SUBS. (DF.318)

Part No.	Description	Plate No.	No. per Unit	Remarks
307766	**BELL CRANK LEVER ASSEMBLY**	27—25	1	
0810/12	**Bush,** for Lever		2	
430469	**Spring,** returning Bell Crank Lever	27—26	1	
430972	**BRAKE ROD (SHORT) CONNECTING BELL CRANK LEVER TO OPERATING LEVER ON R.H. HANDBRAKE MECHANISM**	27—27	1	**For DF.316 only**
430973	**BRAKE ROD (LONG) CONNECTING BELL CRANK LEVER TO OPERATING LEVER ON L.H. HANDBRAKE MECHANISM**	27—28	1	
432076	**BRAKE ROD (SHORT) CONNECTING BELL CRANK LEVER TO OPERATING LEVER ON R.H. HANDBRAKE MECHANISM**		1	**For DF.318 only**
432077	**BRAKE ROD (LONG) CONNECTING BELL CRANK LEVER TO OPERATING LEVER ON L.H. HANDBRAKE MECHANISM**		1	
422529/01	**Fork End,** on Brake Rod	27—29	2	
13105	**Nut,** securing Fork Ends	27—30	2	
422531/16	**Clevis Pin,** securing Rods to Bell Crank Lever and Lever on Handbrake Mechanism	27—31	4	
422501/15	**Split Pin,** retaining Clevis Pin		4	
277152	**Washer,** Spring, Bronze, under Split Pins			

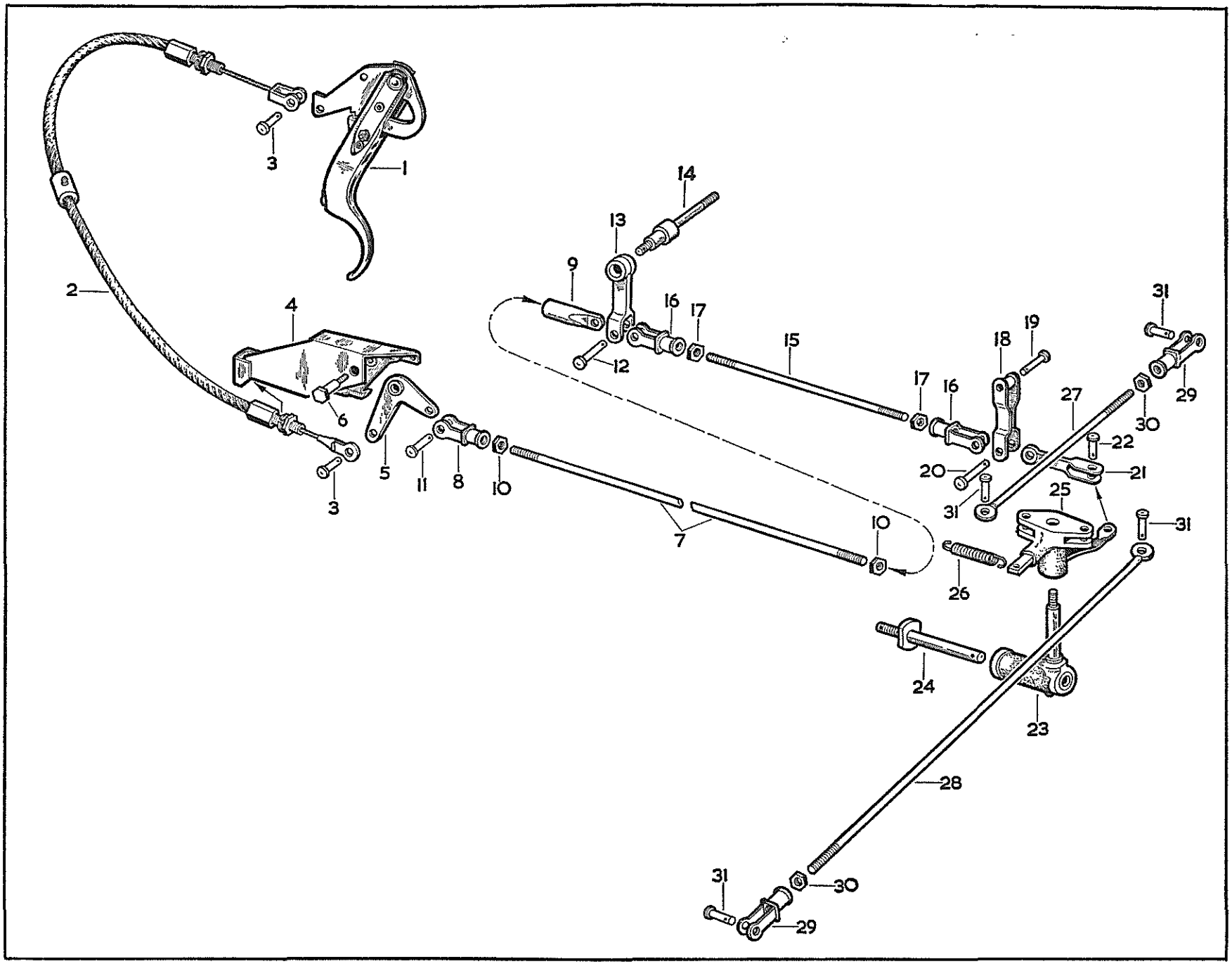
1
2
3
3
4
5
6
7
8
9
10
10
11
12
13
14
15
16
16
17
17
18
19
20
21
22
23
24
25
26
27
28
29
29
30
30
31
31
31
31

PLATE 27

HANDBRAKE CONTROLS

FITTED TO CHASSIS No. 98751 AND SUBS.

Part No.	Description	Plate No.	No. per Unit	Remarks
136062	**HANDBRAKE LEVER ASSEMBLY**	28—1	1	
135977/05	**Trigger and Pawl Spring** (P.89833)		2	
135977/06	**Pawl** (P.109217)		1	
135977/07	**Fulcrum Screw,** for Pawl (P.101084)		1	
135977/08	**Nut,** for Fulcrum Screw (P.101198)		1	
135977/09	**Washer,** Spring, on Screw (2007)		1	
307769/2	**HANDBRAKE CABLE ASSEMBLY, CONNECTING HANDBRAKE LEVER TO HANDBRAKE ROD LEVER**	28—2	1	
422531/16	**Clevis Pin,** securing Handbrake Cable to Handbrake Lever and to Handbrake Rod Lever	28—3	2	
431123	**Washer,** on Handbrake Lever Clevis Pin		1	
422500/02	**Washer,** on Brake Rod Lever Clevis Pin		1	
422501/13	**Split Pin,** retaining Clevis Pin		2	
408619	**Clip,** securing Handbrake Cable to Valance (187048)		1	
425545/13	**Bolt,** for Clip		1	
422543/2	**Nut,** on Bolt		1	
422509/09	**Tab Washer,** retaining Nut		1	
307791	**BRACKET FOR HANDBRAKE ROD LEVER ON FRAME**	28—4	1	
12105/06	**Screw,** Set, securing Handbrake Bracket to Frame		4	
13105	**Nut,** on Setscrew		4	
430241/05	**Washer,** Spring, on Screw		4	
431129	**HANDBRAKE ROD LEVER ASSEMBLY**	28—5	1	
0810/12	**Bush,** for Lever		1	
430987	**Shaft,** for Handbrake Rod Lever	28—6	1	
13306	**Nut,** Slotted on Shaft		1	
422501/07	**Split Pin,** retaining Nut		1	
422500/03	**Washer,** Plain, on Shaft		1	
422166/12	**HANDBRAKE ROD, CONNECTING HANDBRAKE ROD LEVER TO BRAKE IDLER LEVER**	28—7	1	
422529/1	**Fork End,** for Front End of Brake Rod	28—8	1	
431114	**End Eye,** for Rear End of Brake Rod	28—9	1	
13105	**Locknut,** securing Fork End and End Eye	28—10	2	
422531/17	**Clevis Pin,** securing Fork End to Handbrake Rod Lever	28—11	1	
422531/18	**Clevis Pin,** securing Eye End to Brake Idler Lever	28—12	1	
422501/13	**Split Pin,** retaining Clevis Pins		2	
422500/02	**Washer,** Plain, on Clevis Pins		2	
423179/4	**Grommet,** Rubber, in Frame		1	

HANDBRAKE CONTROLS

FITTED TO CHASSIS No. 98751 AND SUBS.

Part No.	Description	Plate No.	No. per Unit	Remarks
431120	**BRAKE IDLER LEVER ASSEMBLY**	28—13	1	
1012/16	**Bush,** for Lever		1	
307784	**Shaft,** for Idler Lever	28—14	1	
422514/09	**Nut,** Nyloc, on Shaft		1	
13308	**Nut,** Slotted		1	
422500/05	**Washer,** Plain, under Nut		1	
422501/17	**Split Pin,** retaining Nut		1	
422166/3	**BRAKE ROD, CONNECTING BRAKE IDLER LEVER TO REAR IDLER LEVER**	28—15	1	
422529/1	**Fork End,** on Brake Rod	28—16	2	
13105	**Locknut,** securing Fork Ends	28—17	2	
423001	**REAR IDLER LEVER ASSEMBLY**	28—18	1	
422531/20	**Clevis Pin,** securing Rear Idler Lever to Axle	28—19	1	
422531/19	**Clevis Pin,** securing Brake Rod to Rear Idler Lever	28—20	1	
422501/13	**Split Pin,** retaining Clevis Pin		2	
422500/02	**Washer,** Plain, under Split Pin		2	
423060	**REAR BRAKE LINK**	28—21	1	
422531/17	**Clevis Pin,** securing Link to Bell Crank Lever	28—22	1	
422501/13	**Split Pin,** retaining Clevis Pin		1	
422500/02	**Washer,** Plain, under Split Pin		1	
423058	**BELL CRANK LEVER SWIVEL ASSEMBLY**	28—23	1	
0810/12	**Bush,** for Swivel		2	
13306	**Nut,** Slotted		1	
422501/07	**Split Pin,** retaining Nut		1	
422500/03	**Washer,** Plain, under Nut		1	
423059	**Swivel Pin**	28—24	1	
422500/05	**Washer,** Plain, on Swivel Pin		2	
13308	**Nut,** Slotted, on Swivel Pin		1	
422501/16	**Split Pin,** retaining Nut		1	

HANDBRAKE CONTROLS

FITTED TO CHASSIS No. 98751 AND SUBS.

Part No.	Description	Plate No.	No. per Unit	Remarks
307766	**BELL CRANK LEVER ASSEMBLY**	28—25	1	
0810/12	**Bush,** for Lever		2	
430469	**Spring,** returning Bell Crank Lever	28—26	1	
430972	**BRAKE ROD (SHORT) CONNECTING BELL CRANK LEVER TO OPERATING LEVER ON L.H. HANDBRAKE MECHANISM**	28—27	1	
430973	**BRAKE ROD (LONG) CONNECTING BELL CRANK LEVER TO OPERATING LEVER ON R.H. HANDBRAKE MECHANISM**	28—28		
422529/01	**Fork End,** on Brake Rod	28—29	2	
13105	**Nut,** securing Fork End	28—30	2	
422531/16	**Clevis Pin,** securing Rods to Bell Crank Lever and Lever on Handbrake Mechanism	28—31	4	
422501/15	**Split Pin,** retaining Clevis Pin		4	
277152	**Washer,** Spring, Bronze under Split Pins		4	

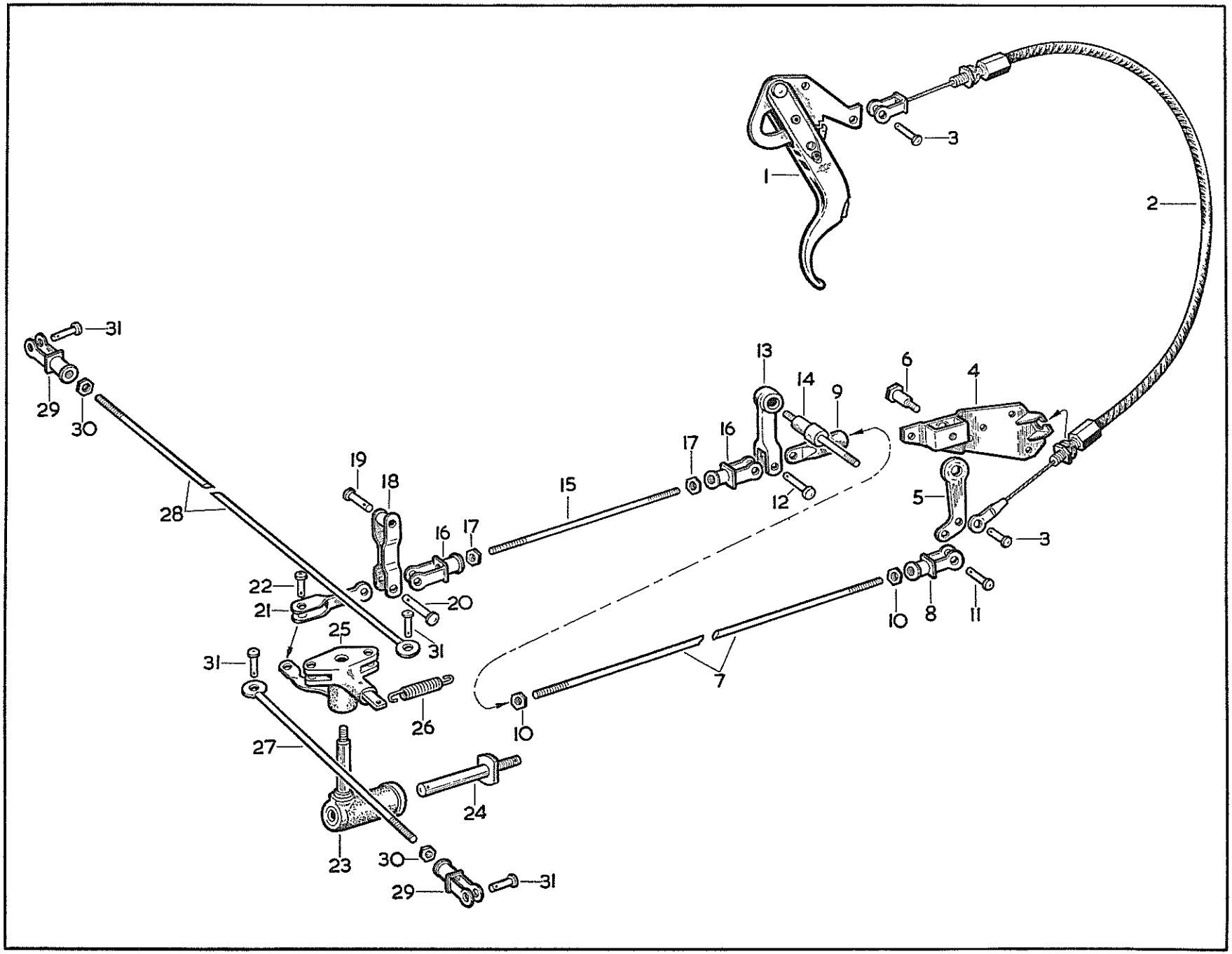
1
2
3
3
4
5
6
7
8
9
10
10
11
12
13
14
15
16
16
17
17
18
19
20
21
22
23
24
25
26
27
28
29
29
30
30
31
31
31
31

PLATE 28

HANDBRAKE CONTROLS

FITTED TO CHASSIS No. 99780 AND SUBS.

Part No.	Description	Plate No.	No. per Unit	Remarks
136062	**HANDBRAKE LEVER ASSEMBLY**	29—1	1	
135977/05	**Trigger and Pawl Spring** (P.89833)		2	
135977/06	**Pawl** (P.109217)		1	
135977/07	**Fulcrum Screw,** for Pawl (P.101084)		1	
135977/08	**Nut,** for Fulcrum Screw (P.101198)		1	
135977/09	**Washer,** Spring, under Nut (2007)		1	
307769/2	**HANDBRAKE CABLE ASSEMBLY, CONNECTING HANDBRAKE LEVER TO HANDBRAKE ROD LEVER**	29—2	1	
422531/16	**Clevis Pin,** securing Handbrake Cable to Handbrake Lever and Rod Lever	29—3	2	
431123	**Washer,** on Handbrake Lever Clevis Pin		1	
422500/02	**Washer,** on Rod Lever Clevis Pin		1	
422501/13	**Split Pin,** retaining Clevis Pins		2	
408619	**Clip,** securing Cable to Valance (187048)		1	
422545/13	**Bolt,** securing Clip		1	
422543/2	**Nut,** on Bolt		1	
422508/09	**Tab Washer,** retaining Nut		1	
307791	**BRACKET FOR HANDBRAKE ROD LEVER ON FRAME**	29—4	1	
12105/06	**Screw,** Set, securing Bracket to Frame		4	
13105	**Nut,** on Setscrews		4	
430241/05	**Washer,** Spring, under Nuts		4	
431129	**HANDBRAKE ROD LEVER ASSEMBLY**	29—5	1	
0810/12	**Bush,** for Lever		1	
430987	**Shaft,** for Rod Lever	29—6	1	
13306	**Nut,** Slotted, on Shaft		1	
422501/07	**Split Pin,** retaining Nut		1	
422500/03	**Washer,** Plain, on Shaft		1	
422166/12	**ROD, CONNECTING HANDBRAKE ROD LEVER TO BRAKE IDLER LEVER**	29—7	1	
422529/1	**Fork End,** at front end of Rod	29—8	1	
431114	**Eye End,** at rear end of Rod	29—9	1	
13105	**Nut,** locking Fork End and Eye Rod	29—10	2	
422531/17	**Clevis Pin,** securing Fork End to Rod Lever	29—11	1	
422531/18	**Clevis Pin,** securing Eye End to Idler Lever	29—12	1	
422501/13	**Split Pin,** retaining Clevis Pins		2	
422500/02	**Washer,** Plain, behind Split Pins		2	
423179/4	**Grommet,** in Frame		1	

HANDBRAKE CONTROLS

FITTED TO CHASSIS No. 99780 AND SUBS.

Part No.	Description	Plate No.	No. per Unit	Remarks
432104	**INTERMEDIATE IDLER LEVER ASSEMBLY**	29—13	1	
1012/16	**Bush,** for Lever		1	
307784	**Shaft,** for Intermediate Idler Lever	29—14	1	
422514/09	**Nut,** Nyloc, on Shaft		1	
13308	**Nut,** Slotted, on Shaft		1	
422500/05	**Washer,** Plain, behind Split Pin		1	
422501/17	**Split Pin,** retaining Nut		1	
422166/13	**ROD, CONNECTING INTERMEDIATE IDLER LEVER TO REAR IDLER LEVER**	29—15	1	
422529/1	**Fork End,** on Rod	29—16	2	
13105	**Nut,** locking Fork Ends to Rod	29—17	2	
432068	**REAR IDLER LEVER ASSEMBLY**	29—18	1	
0810/13	**Bush,** for Idler Lever		1	
422531/21	**Clevis Pin,** securing Rod to Rear Idler Lever	29—19	1	
422501/13	**Split Pin,** retaining Clevis Pin		1	
422500/02	**Washer,** Plain, behind Split Pin		1	
430987	**PIVOT PIN FOR REAR IDLER LEVER**	29—20	1	
13306	**Nut,** Slotted, for Pivot Pin		1	
422501/07	**Split Pin,** retaining Slotted Nut		1	
422500/03	**Washer,** Plain, under Slotted Nut		1	
432075	**REAR BRAKE LINK**	29—21	1	
432107	**Clevis Pin,** securing Rear Brake Link to Rear Idler Lever	29—22	1	
425531/21	**Clevis Pin,** securing Rear Brake Link to Bell Crank Lever	29—23	1	
422501/13	**Split Pin,** retaining Clevis Pins		2	
422500/02	**Washer,** Plain, behind Split Pins		2	
308497	**BELL CRANK LEVER SWIVEL**	29—24	1	
422501/16	**Split Pin,** retaining Swivel		1	
422500/05	**Washer,** Plain, under Split Pin		1	

HANDBRAKE CONTROLS

FITTED TO CHASSIS No. 99780 AND SUBS.

Part No.	Description	Plate No.	No. per Unit	Remarks
432059	**BELL CRANK LEVER ASSEMBLY**	29—25	1	
0810/12	**Bush,** for Lever		2	
422501/16	**Split Pin,** securing Bell Crank Lever to Swivel		1	
422500/05	**Washer,** Plain, behind Split Pin		1	
430469	**Return Spring,** for Bell Crank Lever	29—26	1	
432076	**BRAKE ROD (SHORT) CONNECTING BELL CRANK LEVER TO OPERATING LEVER ON L.H. HANDBRAKE MECHANISM**	29—27	1	
432077	**BRAKE ROD (LONG) CONNECTING BELL CRANK LEVER TO OPERATING LEVER ON R.H. HANDBRAKE MECHANISM**	29—28	1	
422529/01	**Fork End,** on Brake Rods	29—29	2	
13105	**Nut,** locking Fork Ends	29—30	2	
422531/16	**Clevis Pin,** securing Fork Ends to Bell Crank Lever and Operating Lever on Handbrake Mechanism	29—31	4	
422501/15	**Split Pin,** retaining Clevis Pins		4	
277152	**Washer,** under Split Pins		4	

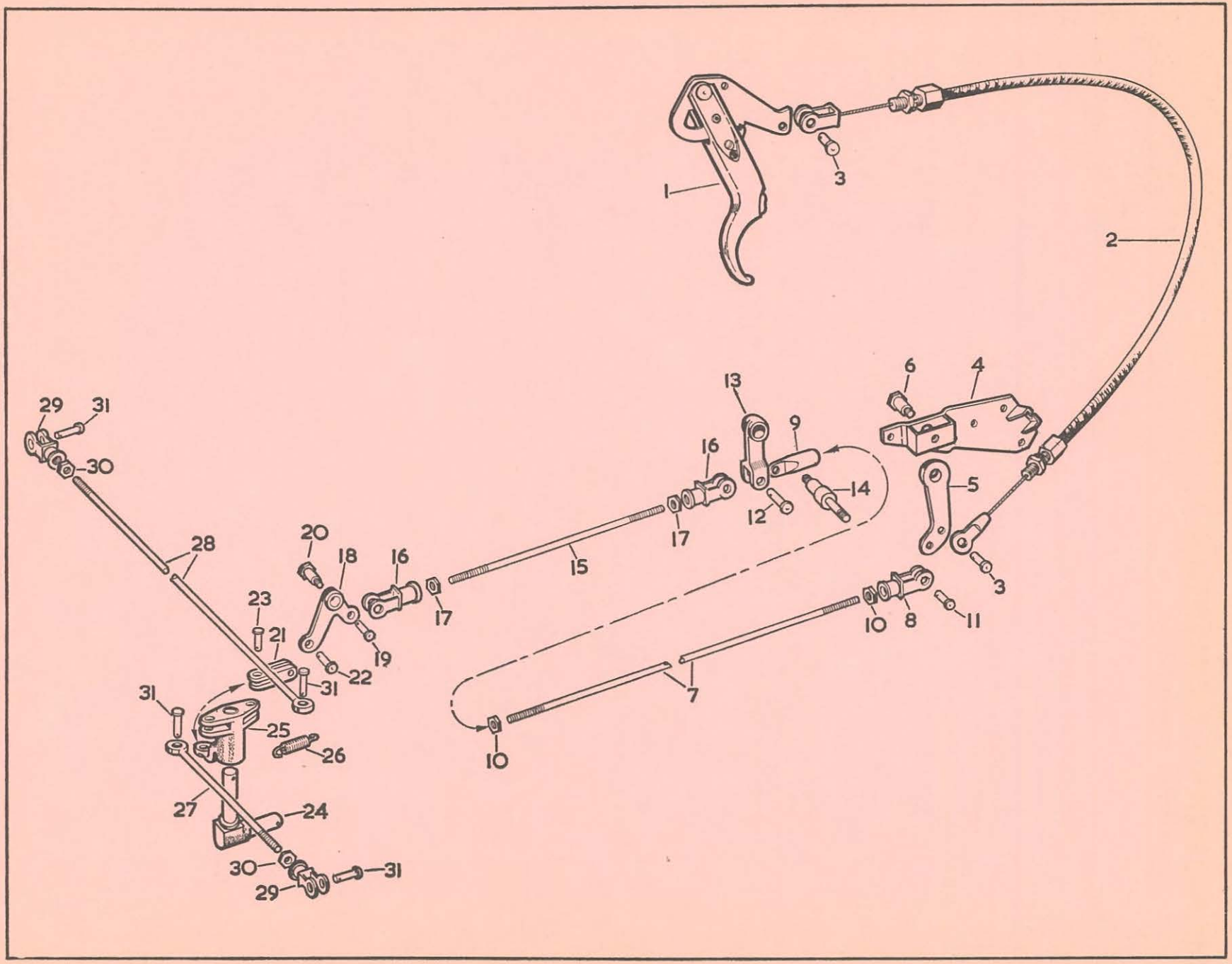
1
2
3
4
5
6
7
8
9
10
11
12
13
14
15
16
17
18
19
20
21
22
23
24
25
26
27
28
29
30
31

PLATE 29

STEERING UNIT AND LINKAGE

Part No.	Description	Plate No.	No. per Unit	Remarks
135078	**STEERING UNIT ASSEMBLY**		1	**R.H. DRIVE ONLY**
136006	**STEERING UNIT ASSEMBLY**		1	**L.H. DRIVE ONLY**
135078/01	**Outer Tube Assembly** (28-12-58)	30—1	1	**R.H. DRIVE ONLY**
136006/01	**Outer Tube Assembly**		1	**L.H. DRIVE ONLY**
135078/02	**Steering Box** (Bare) (S-1-78)	30—2	1	
135078/03	**Stud,** securing End Plate and Tube Housing to Steering Box (13-4-3)	30—3	8	
135078/04	**Stud,** securing Cover Plate to Steering Box (13-3-6)	30—4	4	
135078/05	**End Plate,** at Lower End of Steering Box (S-11-42)	30—5	1	
135078/06	**Gasket,** for End Plate and Tube Housing (S-10-55)	30—6	2	
135078/07	**Shim,** for End Plate and Tube Housing (S-10-56)	30—7	As req'd	
135078/08	**Nut,** on Studs (11-4-4)		8	
103	**Washer,** Spring, under Nuts (12-4-1)		8	
255	**Stud,** in End Plate (13-2-2)	30—8	2	
135078/11	**Bracket,** securing Stator Tube at Lower End (S-15-5)	30—9	1	
135078/12	**Gasket,** between Bracket and End Plate (S-10-57)		As req'd	
90	**Nut,** on Studs (11-2-1)		2	
101	**Washer,** Spring, under Nuts (12-2-1)		2	
82	**Clamp Bolt,** through Bracket (10-1-1)	30—10	1	
89	**Nut,** securing Clamp Bolt (11-1-1)	30—11	1	
100	**Washer,** Spring, under Nut (12-1-1)	30—12	1	
135078/18	**Oil Seal,** in End Plate Bracket (27-4-1)	30—13	1	
135078/19	**Cover Plate,** on Steering Box (S-12-24)	30—14	1	**R.H. DRIVE ONLY**
135099/01	**Cover Plate,** on Steering Box (S-12-25)		1	**L.H. DRIVE ONLY**
135078/20	**Gasket,** between Cover Plate and Steering Box (S-10-19)	30—15	1	
135078/21	**Nut,** on Studs (11-3-5)		4	
FG.105/X	**Washer,** Spring under Nuts (12-3-1)		4	
135078/23	**Washer,** Spring (12-3-5)		1	
135078/24	**Adjusting Screw,** for Rocker Shaft (25-7-2)	30—16	1	
135078/25	**Nut,** securing Adjusting Screw (11-7-2)	30—17	1	
135078/26	**Tab Washer,** securing Nut (12-8-34)	30—18	1	
135078/27	**Plug,** Oil Filler (21-8-3)	30—19	1	
135078/28	**Inner Column** (S-3-166)	30—20	1	**R.H. DRIVE ONLY**
135099/02	**Inner Column** (S-3-177)		1	**L.H. DRIVE ONLY**
135078/29	**Bush,** locating Inner Column (19-9-14)	30—21	1	
135078/31	**Race,** at Lower End of Column (S-23-9)	30—22	2	
137	**Ball,** Steel, for Race (17-4-1)	30—23	20	
135078/33	**Main Nut and Transfer Tube Assembly** (S-2-15)	30—24	1	**R.H. DRIVE ONLY**
135099/03	**Main Nut and Transfer Tube Assembly** (S-2-2)		1	**L.H. DRIVE ONLY**
146	**Roller on Main Nut** (24-5-1)	30—25	1	
135078/32	**Ball,** Steel, for Main Nut (17-4-1)	30—26	14	
135078/35	**Rocker Shaft** (S-7-43)	30—27	1	
135078/36	**Bush,** in Steering Box (19-9-7)	30—28	1	
135078/37	**Bush,** for Trunnion (19-9-4)	30—29	1	
4101	**Oil Seal,** in Steering Box (27-9-4)	30—30	1	
135078/39	**Drop Arm** (S-9-100)	30—31	1	**R.H. DRIVE ONLY**
135099/04	**Drop Arm** (S-9-104)		1	**L.H. DRIVE ONLY**
135078/40	**Nut,** securing Drop Arm (11-8-7)	30—32	1	
135078/41	**Tab Washer,** securing Nut (12-8-36)	30—33	1	
305768	**DRAUGHT EXCLUDER FOR STEERING COLUMN**	30—34	1	

STEERING UNIT AND LINKAGE

Part No.	Description	Plate No.	No. per Unit	Remarks
307792	**STEERING COLUMN CONTROL ASSEMBLY (32926F)**	30—35	1	
133909/01	**Top Cover Assembly** (323877)		1	
133055/04	**Horn Push Contact Assembly** (321824)		1	
133909/02	**Lever,** for Trafficator Switch (324158)		1	
133909/03	**Base,** for Trafficator Switch (323454)		1	
133055/07	**Rotor Plunger,** for Trafficator Switch (322150)		1	
133055/08	**Cam Pawl and Spring Set** (324527)		1	
133909/06	**Striker Ring** (324537)		1	
307792/01	**4 Core Cable**		1	
133909/04	**Stator Plate and Sleeve Assembly** (304803)		1	
305377/02	**Retaining Ring,** for Horn Push (323645)		1	
305377/03	**Trip Ring,** for Trafficator Switch (331148)		1	
133909/08	**Contact Plate** (324824)		1	
305791	**STATOR TUBE (331638)**	30—36	1	
427299	**Bush,** Rubber, for Stator Tube		3	
134295	**STEERING WHEEL**	30—37	1	
131752/01	**Clamp Lever,** Bolt, Nut and Washer	30—38	1	
134295/01	**Dust Cover,** Telescopic, between Outer Tube and Wheel	30—39	1	
134295/02	**Cup,** at top of Telescopic Dust Cover	30—40	1	
134295/03	**Cup,** at bottom of Telescopic Dust Cover	30—41	1	
272590	**Circlip,** retaining Steering Wheel on Inner Column	30—42	1	
424806	**Grub Screw,** Steering Wheel	30—43	2	
423586	**STEERING PIVOT LEVER AND BUSH ASSEMBLY**	30—44	1	**R.H. DRIVE ONLY**
422981	**STEERING PIVOT LEVER AND BUSH ASSEMBLY**		1	**L.H. DRIVE ONLY**
420940	**Bush,** in Lever		2	
425659	**Pivot Pin,** for Lever	30—45	1	
422136	**Washer,** on both faces of Lever Boss	30—46	2	
13308	**Nut,** Slotted, securing Pivot Lever to Frame Bottom Plate		1	
422501/16	**Split Pin,** retaining Nut		1	
422500/05	**Washer,** Plain, under Nut		1	
422521/39	**Grease Nipple,** for Steering Pivot	30—47	1	

STEERING UNIT AND LINKAGE

Part No.	Description	Plate No.	No. per Unit	Remarks
307030	**DRAG LINK ASSEMBLY**	30—48	1	
302626/01	**Drag Link** (JE.2703)	30—49	1	
302624/02	**Locknut,** R.H. (KL.46008)		1	
302624/03	**Locknut,** L.H. (KL.46038)	30—50	1	
307029/01	**Socket Assembly,** R.H. (J.5973)		1	**NOT REQUIRED WITH HYDROSTEER (POWER ASSISTED STEERING)**
307029/02	**Socket Assembly,** L.H. (J.5974)	30—51	1	
302624/06	**Rubber Boot and Washer** (J.5503)	30—52	2	
302624/07	**Clip,** securing Boot (J.4036)	30—53	2	
302624/08	**Nut,** securing Socket Assembly to Pivot Lever (KL.18809)	30—54	2	
422501/17	**Split Pin,** retaining Nut	30—55	2	
422521/39	**Grease Nipple** (Tec H-A-39) on Ends of Steering Drag Link	30—56	2	
307029	**TRACK ROD ASSEMBLY (JS.595P/23.4")**	30—57	2	
302624/01	**Track Rod**	30—58	2	
302624/02	**Locknut,** R.H. (KL.46008)	30—59	2	
302624/03	**Locknut,** L.H. (KL.46038)	30—60	2	
307029/01	**Socket Assembly** R.H. (J.5973)	30—61	2	
307029/02	**Socket Assembly** L.H. (J.5974)	30—62	2	
302624/06	**Rubber Boot and Washer** (J.5503)	30—63	4	
302624/07	**Clip,** securing Boot (J.4036)	30—64	4	
302624/08	**Nut,** securing Socket Assembly to Pivot Lever also to Steering Arms (KL.18809)	30—65	4	
422501/17	**Split Pin,** retaining Nut	30—66	4	
422521/39	**Grease Nipple** (Tec. H-A-39) on Inner End of Track Rod	30—67	2	
422521/29	**Grease Nipple** (Tec. H-29) on Outer End of Track Rod	30—68	2	

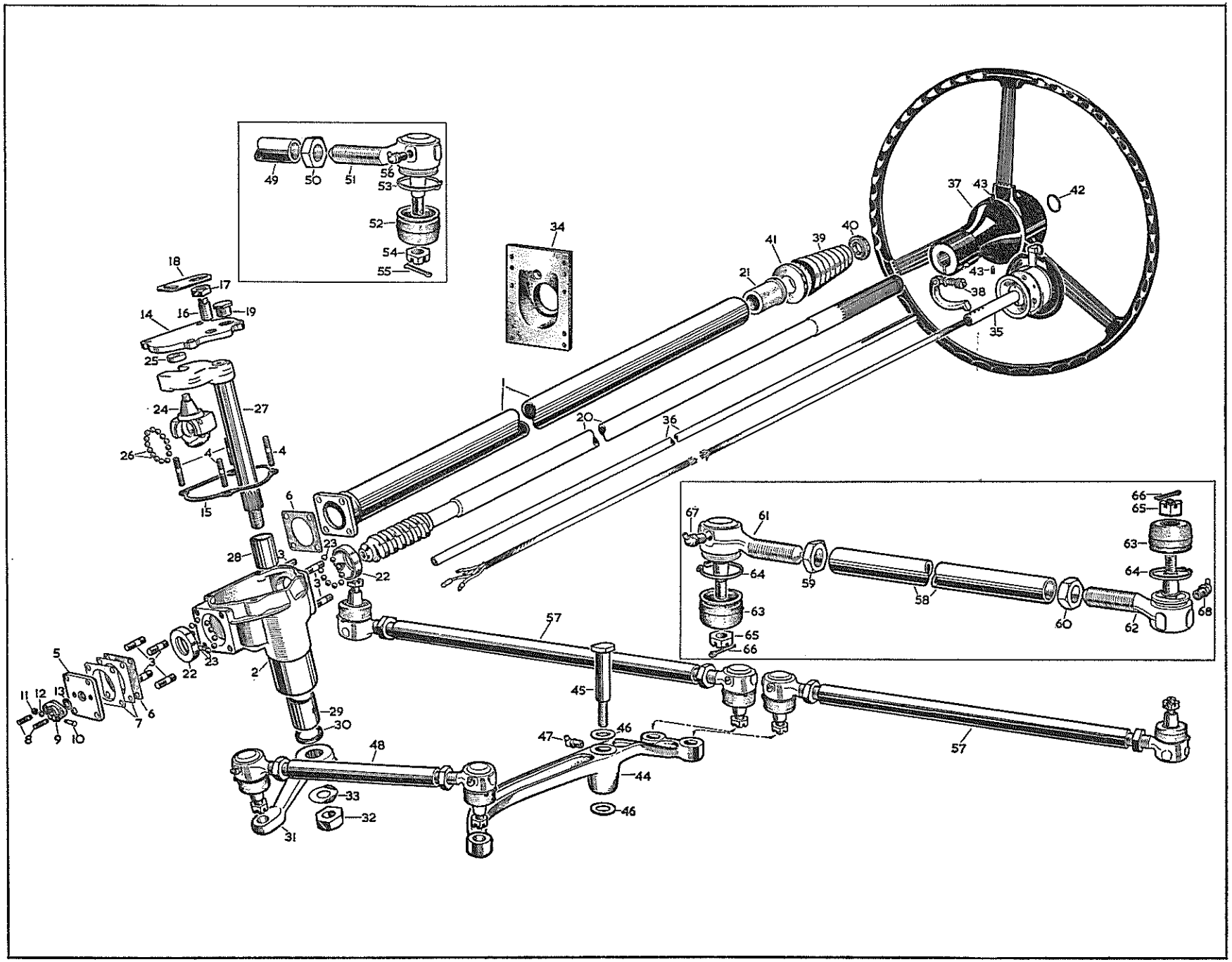
49
50
51
56
53
52
54
55
34
37
43
42
41
39
40
21
43-B
38
35
18
17
14
16
19
25
24
27
26
4
4
15
1
20
36
6
28
3
23
22
3
23
22
2
5
11
12
13
8
9
10
7
6
29
30
48
33
32
31
45
47
46
44
46
57
57
67
61
64
63
65
66
59
58
60
62
68
66
65
63
64

PLATE 30

STEERING UNIT AND LINKAGE (HYDROSTEER)

Part No.	Description	Plate No.	No. per Unit	Remarks
308730	**STEERING UNIT ASSEMBLY**		1	**R.H. DRIVE ONLY**
135078/01	**Outer Tube Assembly** (28-12-58)	31—1	1	
135078/02	**Steering Box** (Bare) (S-1-78)	31—2	1	
135078/03	**Stud,** securing End Plate and Tube to Steering Box (13-4-3)	31—3	8	
135078/04	**Stud,** securing Cover Plate to Steering Box (13-3-6)	31—4	4	
135078/05	**End Plate,** at Lower End of Steering Box (S-11-42)	31—5	1	
135078/06	**Gasket,** for End Plate (S-10-55)	31—6	1	
135078/07	**Shim,** for End Plate (S-10-56)	31—7	As req'd	
135078/08	**Nut,** on Studs (11-4-4)		8	
103	**Washer,** Spring, under Nuts (12-4-1)		8	
255	**Stud,** in End Plate (13-2-2)	31—8	2	
135078/11	**Bracket,** securing Stator Tube at Lower End (S-15-5)	31—9	1	
90	**Nut,** on Studs (11-2-1)		2	
101	**Washer,** Spring, under Nuts (12-2-1)		2	
82	**Clamp Bolt,** through Bracket (10-1-1)	31—10	1	
89	**Nut,** securing Clamp Bolt (11-1-1)	31—11	1	
100	**Washer,** Spring, under Nut (12-1-1)	31—12	1	
135078/18	**Oil Seal,** in End Plate Bracket (27-4-1)	31—13	1	
135078/19	**Cover Plate,** on Steering Box (S-12-24)	31—14	1	
135078/20	**Gasket,** between Cover Plate and Steering Box (S-10-19)	31—15	1	
135078/21	**Nut,** on Studs (11-3-5)		4	
FG.105/X	**Washer,** Spring, under Nuts (12-3-1)		4	
135078/23	**Washer,** Plain (12-3-5)		4	
135078/24	**Adjusting Screw,** for Rocker Shaft (25-7-2)	31—16	1	
135078/25	**Nut,** securing Adjusting Screw (11-7-2)	31—17	1	
135078/26	**Tab Washer,** securing Nut (12-8-34)	31—18	1	
135078/27	**Plug,** Oil Filler (21-8-3)	31—19	1	
135078/28	**Inner Column** (S-3-166)	31—20	1	
135078/29	**Bush,** locating Inner Column (19-9-14)	31—21	1	
135078/30	**Circlip,** retaining Inner Column (31-9-1)		1	
135078/31	**Race,** at Lower End of Column (S-23-9)	31—22	2	
137	**Ball,** Steel, for Race (17-4-1)	31—23	20	
135078/33	**Main Nut and Transfer Tube Assembly** (S-2-15)	31—24	1	
146	**Roller,** on Main Nut (24-5-1)	31—25	1	
135078/32	**Ball,** Steel, for Main Nut (17-4-1)	31—26	14	
135078/35	**Rocker Shaft** (S-7-43)	31—27	1	
135078/36	**Bush,** in Steering Box (19-9-7)	31—28	1	
135078/37	**Bush,** for Trunnion (19-9-4)	31—29	1	
4101	**Oil Seal,** for Steering Box (27-9-4)	31—30	1	
135078/39	**Drop Arm** (S-9-100)	31—31	1	
135078/40	**Nut,** securing Drop Arm (11-8-7)	31—32	1	
135078/41	**Tab Washer,** securing Nut (12-8-36)	31—33	1	
308822	**STEERING UNIT ASSEMBLY**		1	**L.H. DRIVE ONLY**
136006/01	**Outer Tube Assembly**		1	
135099/01	**Cover Plate,** on Steering Box (S-12-25)		1	
135099/02	**Inner Column** (S-3-177)		1	
135099/03	**Main Nut and Transfer Tube Assembly** (S-2-2)		1	
135099/04	**Drop Arm** (S-9-104)		1	
	All other items as for Steering Unit 308730			
305768	**DRAUGHT EXCLUDER FOR STEERING COLUMN**	31—34	1	

STEERING UNIT AND LINKAGE (HYDROSTEER)

Part No.	Description	Plate No.	No. per Unit	Remarks
307792	**STEERING COLUMN CONTROL ASSEMBLY (32926F)**	31—35	1	
133909/01	**Top Cover Assembly** (322877)		1	
133055/04	**Horn Push Contact Assembly** (321824)		1	
133909/02	**Lever,** for Trafficator Switch (324158)		1	
133909/03	**Base,** for Trafficator Switch (323454)		1	
133055/07	**Rotor Plunger,** for Trafficator Switch (322150)		1	
133055/08	**Cam Pawl and Spring Set** (324527)		1	
133909/06	**Striker Ring** (324537)		1	
307792/01	**4 Core Cable**		1	
133909/04	**Stator Plate and Sleeve Assembly** (304803)		1	
305377/02	**Retaining Ring,** for Horn Push (323645)		1	
305377/03	**Trip Ring,** for Trafficator Switch (331148)		1	
133909/08	**Contact Plate** (324824)		1	
305791	**STATOR TUBE ASSEMBLY (331638)**	31—36	1	
427299	**Bush,** Rubber, for Stator Tube		3	
134295	**STEERING WHEEL**	31—37	1	
131752/01	**Clamp Lever,** Bolt, Nut and Washer	31—38	1	
134295/01	**Dust Cover,** Telescopic, between Outer Tube and Steering Wheel	31—39	1	
134295/02	**Cup,** at top of Telescopic Dust Cover	31—40	1	
134295/03	**Cup,** at bottom of Telescopic Dust Cover	31—41	1	
272590	**Circlip,** retaining Steering Wheel on Inner Column	31—42	1	
424806	**Grub Screw,** Steering Wheel	31—43	2	
423586	**STEERING PIVOT LEVER AND BUSH ASSEMBLY**	31—44	1	**R.H. DRIVE ONLY**
420940	**Bush,** in Lever		1	
422981	**STEERING PIVOT LEVER AND BUSH ASSEMBLY**		1	**L.H. DRIVE ONLY**
420940	**Bush,** in Lever		1	
425659	**Pivot Pin,** for Lever	31—45	1	
422136	**Washer,** on both Faces of Lever Boss	31—46	2	
13308	**Nut,** Slotted, securing Pivot Lever to Frame Bottom Plate		1	
422501/16	**Split Pin,** retaining Nut		1	
422500/05	**Washer,** Plain, under Nut		1	
422521/39	**Grease Nipple,** for Steering Pivot	31—47	1	

STEERING UNIT AND LINKAGE (HYDROSTEER)

Part No.	Description	Plate No.	No. per Unit	Remarks
308727	**DRAG LINK ASSEMBLY**	31—48	1	**R.H. DRIVE ONLY**
302626/01	**Drag Link** (JE.2703)	31—49	1	
302624/02	**Locknut,** R.H. (KL.46008)	31—50	1	
302624/03	**Locknut,** L.H. (KL.46038)	31—51	1	
432283	**Drag Link End,** R.H.	31—52	1	
307029/02	**Socket Assembly,** L.H. (J.5974)	31—53	1	
302624/06	**Rubber Boot and Washer** (J.5503)	31—54	1	
302624/07	**Clip,** securing Boot (J.4036)	31—55	1	
302624/08	**Nut,** securing Socket Assembly to Pivot Lever (KL.18809)	31—56	1	
422501/17	**Split Pin,** retaining Nut	31—57	1	
422521/39	**Grease Nipple** (Tec. H-A-39)	31—58	1	
308823	**DRAG LINK ASSEMBLY**		1	**L.H. DRIVE ONLY**
432501	**Drag Link End, L.H.**		1	
307029/01	**Socket Assembly, R.H.** (J.5973)		1	
	All other items as for Drag Link 308727			
307029	**TRACK ROD ASSEMBLY (JS.595P/23.4")**	31—59	2	
302624/01	**Track Rod**	31—60	2	
302624/02	**Locknut,** R.H. (KL.46008)	31—61	2	
302624/03	**Locknut,** L.H. (KL.46038)	31—62	2	
307029/01	**Socket Assembly, R.H.** (J.5973)	31—63	2	
307029/02	**Socket Assembly, L.H.** (J.5974)	31—64	2	
302624/06	**Rubber Boot and Washer** (J.5503)	31—65	4	
302624/07	**Clip,** securing Boot (J.4036)	31—66	4	
302624/08	**Nut,** securing Socket Assembly to Pivot Lever, also to Steering Arms (KL.18809)	31—67	4	
422501/17	**Split Pin,** retaining Nut	31—68	4	
422521/39	**Grease Nipple** (Tec. 4-4-39) on Inner End of Track Rod	31—69	2	
422521/29	**Grease Nipple** (Tec. 4-29) on Outer End of Track Rod	31—70	2	
136438	**HYDRAULIC RAM ASSEMBLY (VC.120023)**	31—71	1	**R.H. DRIVE ONLY**
9383	**Anchor Rubber,** between Anchor Bracket and Inner and Outer Anchor Washers (S.114/1)		2	
9384	**Anchor Washer,** Inner, retaining Anchor Rubber (S.102/15)		1	
9385	**Anchor Washer,** Outer, retaining Anchor Rubber (S.102/16)		1	
UNF.450/L	**Anchor Nut,** Slotted, securing Hydraulic Ram Assembly to Anchor Bracket		1	
L.104/8U	**Split Pin,** retaining Nut		1	

STEERING UNIT AND LINKAGE (HYDROSTEER)

Part No.	Description	Plate No.	No. per Unit	Remarks
136477	**HYDRAULIC RAM ASSEMBLY (VC.12033A)** **All items as for Ram Assembly 136438**		1	**L.H. DRIVE ONLY**
308721	**ANCHOR BRACKET ASSEMBLY MOUNTING HYDRAULIC RAM TO FRAME**	31—72	1	**R.H. DRIVE ONLY**
308819	**ANCHOR BRACKET ASSEMBLY MOUNTING HYDRAULIC RAM TO FRAME**		1	**L.H. DRIVE ONLY**

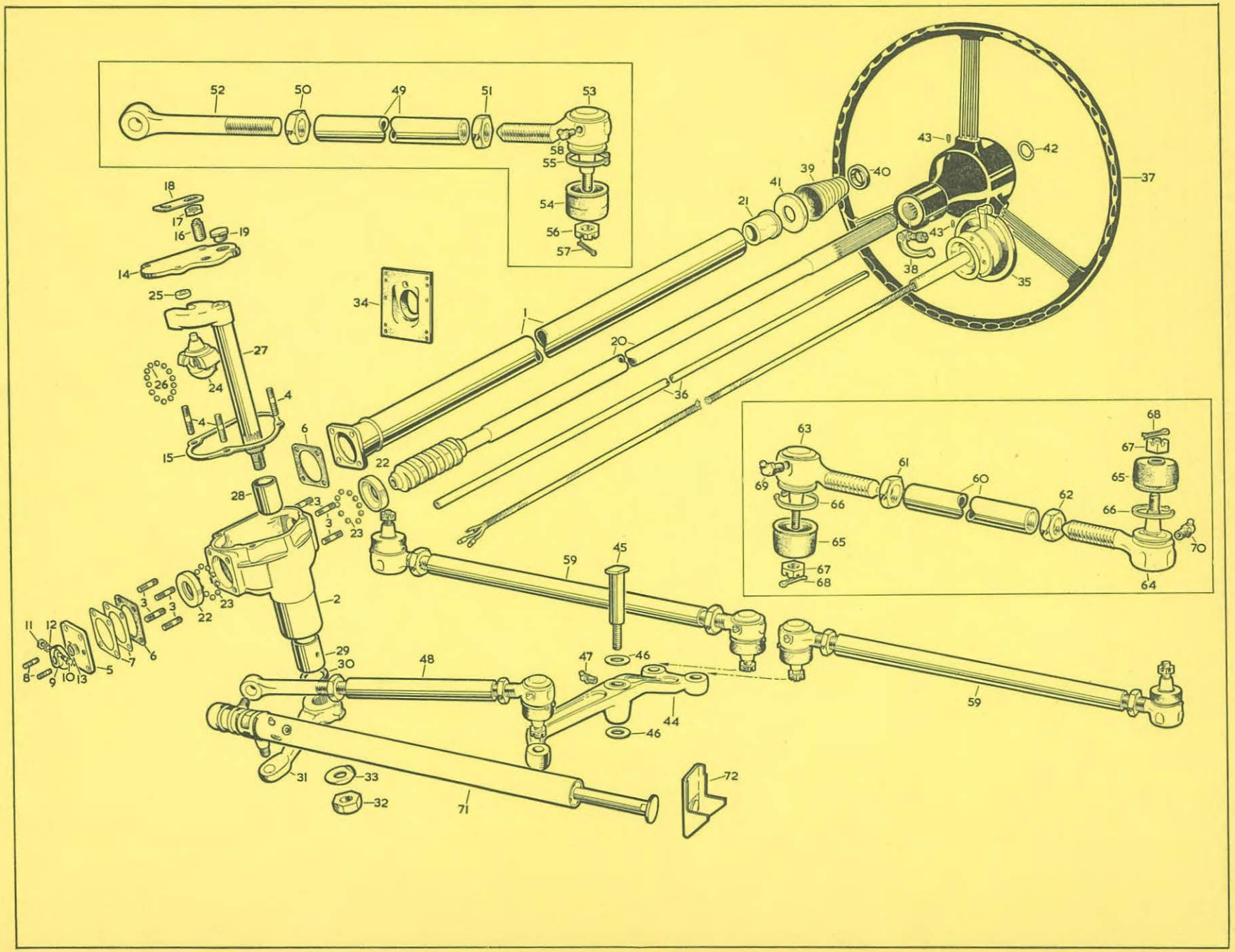
52
50
49
51
53
58
55
54
56
57
18
17
16
19
14
25
27
24
26
4
4
15
34
1
20
36
21
41
39
40
43
42
37
43
38
35
6
22
28
3
3
23
2
29
30
48
47
46
45
59
44
46
59
31
33
32
71
72
11
12
8
9
10
13
5
7
6
3
3
22
23
63
69
66
65
67
68
61
60
62
66
65
67
68
70
64

PLATE 31

RESERVOIR ASSEMBLY (HYDROSTEER)

Part No.	Description	Plate No.	No. per Unit	Remarks
136439	**RESERVOIR ASSEMBLY FOR OIL FEED TO HYDRAULIC RAM ASSEMBLY (P.417224.B) (HE.1746/6)**	32—1	1	
8238	**Filler Cap** (Complete with Level Indicator) (HE.1491)	32—2	1	
7753	**Gasket,** on Cover Bolt (HE.1324)	32—3	1	
7751	**Gasket,** under Cover (HE.1306)	32—4	1	
7752	**Filter** (HE.1307)	32—5	1	
7545	**'O' Ring,** between Reservoir and Body (HE.1322)	32—6	2	
9345	**'O' Ring,** on Outlet Adaptor (HE.5390)	32—7	1	
9344	**'O' Ring,** on Inlet Adaptor (HE.5389)	32—8	1	
9346	**Bolt,** securing Reservoir to Cast Mounting Bracket (HE.1328)		2	
9347	**Gasket,** on Bolts (HE.1323)		2	
12104/08	**Bolt,** securing Reservoir Assembly to Support Bracket		3	
422514/05	**Nut,** Nyloc, on Bolt		3	
432291	**SUPPORT BRACKET FOR RESERVOIR ASSEMBLY**	32—9	1	
12104/05	**Bolt,** securing Bracket to Valance		4	
422514/05	**Nut,** Nyloc, on Bolt		4	
309110	**H.P. HOSE ASSEMBLY, PUMP TO HYDRAULIC RAM (UP.325)**		1	**L.H. DRIVE ONLY**
309173	**H.P. HOSE ASSEMBLY, PUMP TO HYDRAULIC RAM**	32—10	1	**R.H. DRIVE ONLY**
432416	**L.P. HOSE ASSEMBLY, RESERVOIR TO PUMP**	32—11	1	**R.H. DRIVE ONLY**
432597/A	**L.P. HOSE ASSEMBLY, RESERVOIR TO PUMP (UP.316)**		1	**L.H. DRIVE ONLY**

RESERVOIR ASSEMBLY (HYDROSTEER)

Part No.	Description	Plate No.	No. per Unit	Remarks
308830	**L.P. HOSE ASSEMBLY, RESERVOIR TO HYDRAULIC RAM (UP.302)**	32—12	1	**R.H. DRIVE ONLY**
308830/01	**BANJO ASSEMBLY FOR L.P. HOSE**	32—13	1	**R.H. DRIVE ONLY**
308830/02	**Banjo Bolt,** securing Banjo	32—14	1	
308830/03	**Washer,** Sealing, on each face of Banjo	32—15	2	
432706	**HOSE CLIP ASSEMBLY, SECURING HOSES TO FRONT CROSS MEMBER**		1	**L.H. DRIVE ONLY**
302454/40	**HOSE CLIP, SECURING HOSES TO FRONT CROSS MEMBER**		1	
302454/40	**HOSE CLIP, SECURING HOSES TO HYDRAULIC RAM**		1	
432719	**HOSE CLIP ASSEMBLY, SECURING HOSES TO STEERING BOX**		1	
309111	**L.P. HOSE ASSEMBLY, RESERVOIR TO HYDRAULIC RAM (UP.326)**		1	**L.H. DRIVE ONLY**
422522/03	**Clip,** securing L.P. Hose	32—16	3	**R.H. DRIVE ONLY**
276306/14	**Hose Clip,** securing Hose to Valance	32—17	1	
422544/10	**Bolt,** securing Clip to Valance		1	
422514/03	**Nut,** on Bolt		1	
422522/03	**Clip,** securing L.P. Hose		3	**L.H. DRIVE ONLY**
432719	**Hose Clip Assembly,** securing Hose to Valance		1	
12104/06	**Bolt,** securing Clip to Valance		1	
422514/05	**Nut,** on Bolt		1	

RESERVOIR ASSEMBLY (HYDROSTEER)

Part No.	Description	Plate No.	No. per Unit	Remarks
401174	**HOSE CLIP, SECURING H.P. AND L.P. HOSES**		2	**L.H. DRIVE ONLY**
432284	**HOSE CLIP ASSEMBLY, SECURING HOSES TO FRONT CROSS MEMBER**	32—18	1	**R.H. DRIVE ONLY**
12104/06	**Bolt,** securing Clip		1	
422514/05	**Nut,** Nyloc on Bolt		1	

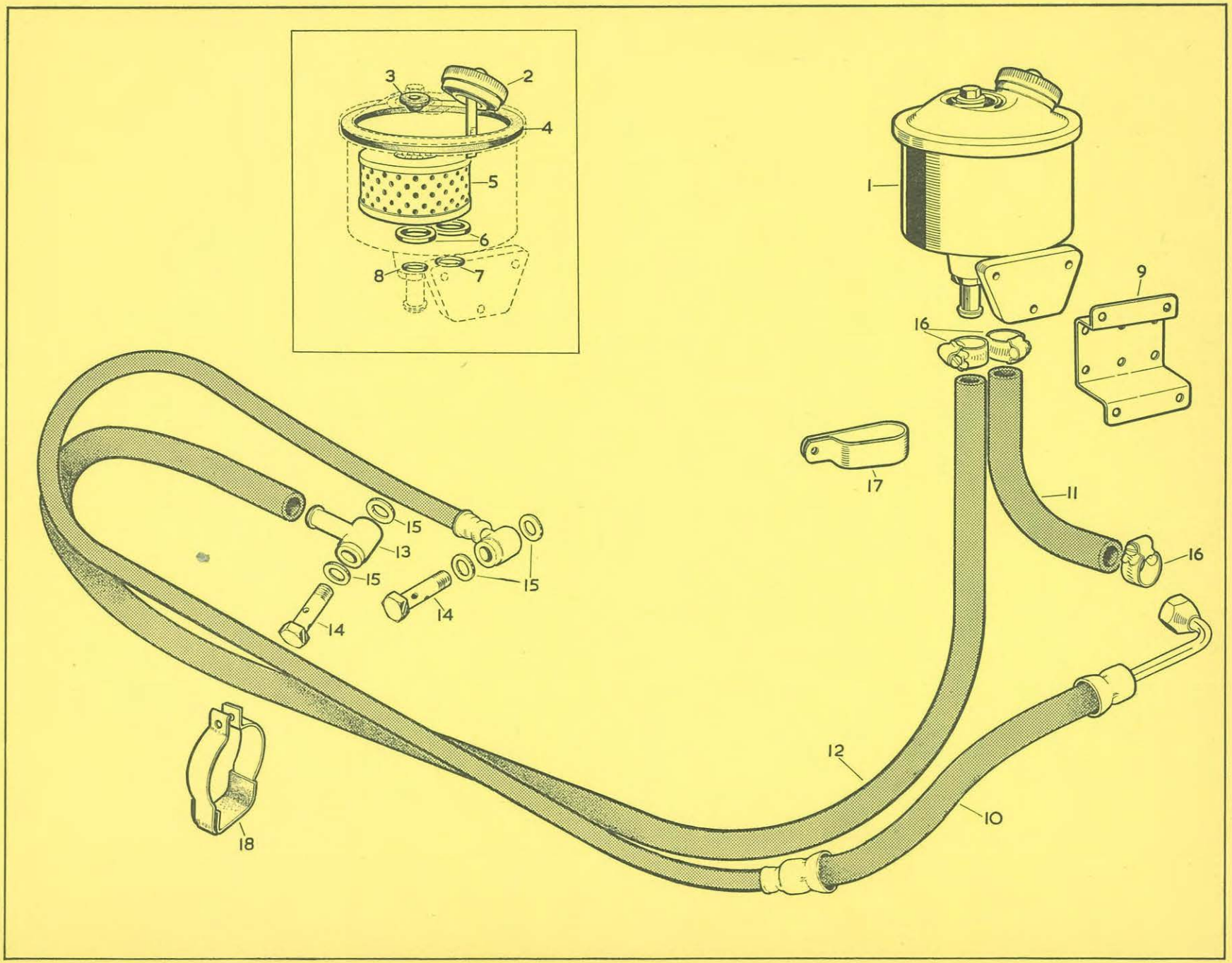
1
2
3
4
5
6
7
8
9
10
11
12
13
14
15
16
17
18

OIL PUMP ASSEMBLY (HYDROSTEER)

Part No.	Description	Plate No.	No. per Unit	Remarks
136441	**OIL PUMP ASSEMBLY (HE.4526)**		1	
7543	**Body Assembly** (HE.2587)	33—1	1	
7544	**Dowel,** in Body (HE.1182)	33—2	2	
7545	**Rubber Gasket,** around Venturi Tube in Body (HE.1322)	33—3	1	
9386	**Adaptor,** at top of Body (HE.2709)	33—4	1	
7546	**Screw and Lockwasher,** securing Adaptor to Body (HE.1769)	33—5	2	
7547	**'O' Ring,** (Small) in Body (HE.2227)	33—6	1	
7548	**'O' Ring** (Large) in Body (HE.1922)	33—7	1	
7549	**Rotor Assembly** (HE.1196)	33—8	1	
7550	**Shaft,** operating Rotor (HE.2454)	33—9	1	
7551	**Drive Pin,** between Shaft and Inner Rotor (HE.1193)	33—10	1	
7552	**Circlip,** on Shaft (HE.1181)	33—11	1	
7553	**Thrust Button,** in Cover, at bottom of Shaft (HE.1194)	33—12	1	
7554	**Cover Assembly** (HE.1164)	33—13	1	
9387	**Flow Control Valve Assembly** (HE.1166)	33—14	1	
7556	**Return Spring,** for Flow Control Valve (HE.1173)	33—15	1	
7557	**'O' Ring,** on Flow Control Adaptor (HE.1179)	33—16	1	
9388	**Adaptor,** for Flow Control Valve (HE.2474)	33—17	1	
7558	**Bolt and Lockwasher,** securing Body to Cover (HE.1195)	33—18	5	
7543	**BODY ASSEMBLY FOR OIL PUMP (HE.2587)**	33—1	1	
7560	**Oil Seal,** in Body (HE.3545)	33—19	1	
9387	**FLOW CONTROL VALVE ASSEMBLY (HE.1166)**	33—14	1	
8283	**Flow Control Valve** (HE.1177)	33—20	1	
7562	**Spring,** behind Relief Valve (HE.2163)	33—21	1	
7563	**Relief Valve** (HE.1176)	33—22	1	
7564	**Circlip,** retaining Relief Valve in Flow Control Valve (HE.1191)	33—23	1	
7950	**REPAIR KIT FOR OIL PUMP (HE.3922/1)**		1	

Comprising:—

7545. Rubber Gasket
7547. 'O' Ring
7548. 'O' Ring
7557. 'O' Ring
7560. Oil Seal

OIL PUMP ASSEMBLY (HYDROSTEER)

Part No.	Description	Plate No.	No. per Unit	Remarks
C.14936	**COUPLING ASSEMBLY, CONNECTING POWER STEERING PUMP WITH DYNAMO (54211204)**	33—24	1	
8285	**Coupling only** (54210027)		1	
C.13844	**Driving Dog** (239889)		2	
C.14475	**Stud,** in Rear Face of Dynamo, for fixing of Power Steering Pump (120314)		3	
UCN.131/L	**Nut,** on Studs (156430)		3	
C.16816	**Washer,** Spring, under Nuts (185061)		3	

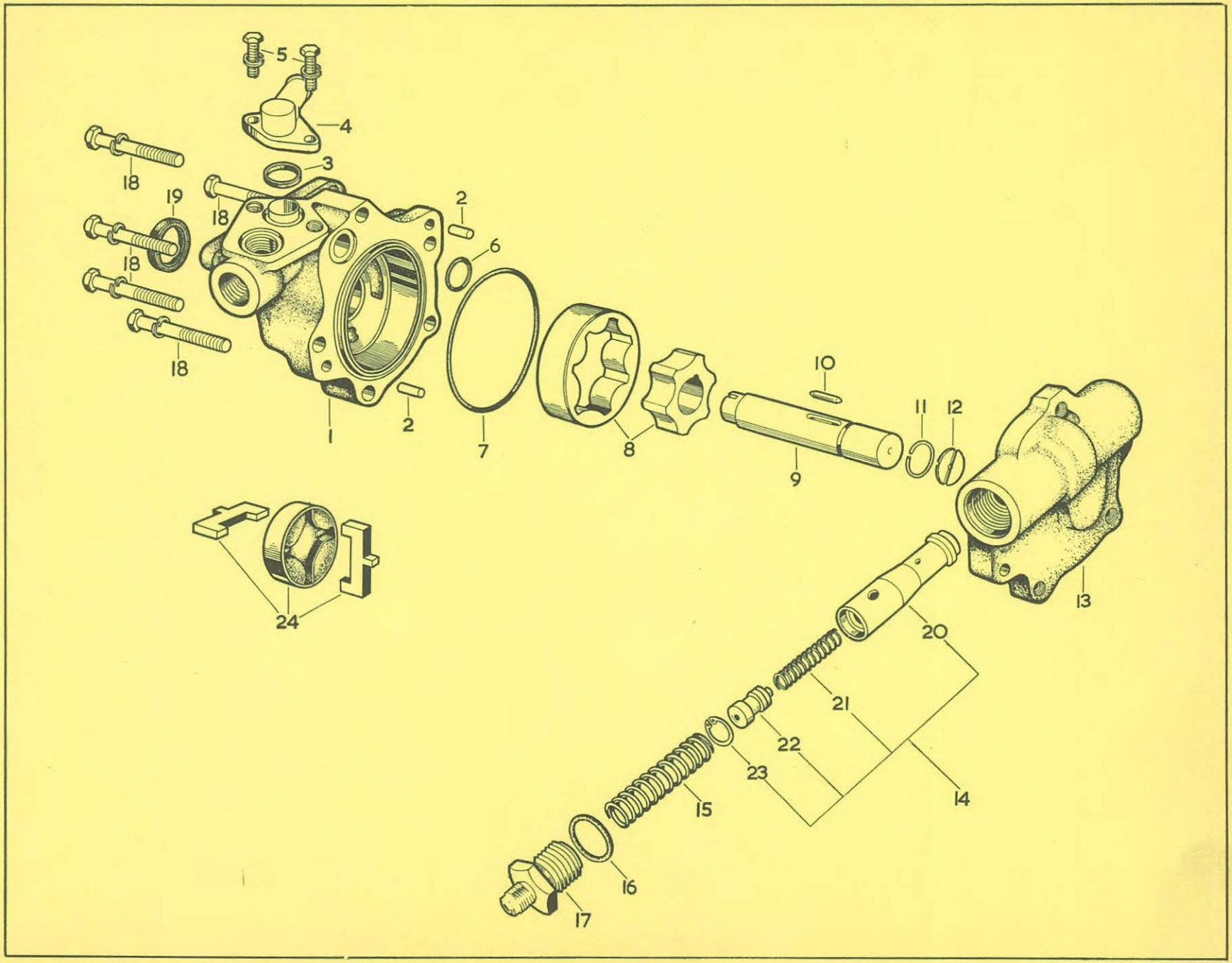

PLATE 33

GEAR SELECTOR CONTROL

Part No.	Description	Plate No.	No. per Unit	Remarks
307197	**SELECTOR QUADRANT ASSEMBLY**	34—1	1	
0810/12	**Bush,** for Quadrant		1	
427023	**Screw,** securing Cap to Quadrant		2	
423145	**Washer,** Shakeproof, on Screw		2	
267265	**Dowel,** positioning Quadrant		1	
307189	**COVER FOR SELECTOR QUADRANT**	34—2	1	
430193	**Screw,** long, securing Cover to Quadrant		1	
428570	**Screw,** long, securing Cover to Quadrant		2	
423145	**Washer,** Shakeproof, on Screw		3	
307192	**SELECTOR HAND LEVER**	34—3	1	
430195	**Knob,** on Selector Hand Lever	34—4	1	
430199	**Nut,** on Selector Hand Lever	34—5	1	
430194	**Pivot Pin,** in Selector Hand Lever	34—6	1	
422543/2	**Nut,** securing Pivot Pin		1	
422508/09	**Washer,** under Nut		1	
430200	**Spring,** tensioning Selector Hand Lever	34—7	1	
430242	**Stop,** for Selector Hand Lever	34—8	1	
430243	**Packing** (Fibre) for Stop	34—9	1	
906049	**Setscrew,** Rd./Hd., securing Stop		2	
135946	**SELECTORCONTROLTUBEASSEMBLY**	34—10	1	**R.H. DRIVE ONLY**
307701	**SELECTORCONTROLTUBEASSEMBLY**		1	**L.H. DRIVE ONLY**
430337	**Washer,** under Hand Lever Boss	34—11	1	
305768	**DRAUGHT EXCLUDER**	34—12	1	
278276	**Ferrule,** for Draught Excluder	34—13	1	

GEAR SELECTOR CONTROL

Part No.	Description	Plate No.	No. per Unit	Remarks
426264	**SUPPORT CLAMP AND CAP ASSEMBLY ON STEERING COLUMN**	34—14	1	
11104/09	**Bolt,** securing Cap to Clamp		2	
430241/04	**Washer,** Spring, on Bolt		2	
307205	**BOTTOM BRACKET ASSEMBLY ON STEERING COLUMN**	34—15	1	
0810/12	**Bush,** for Bracket		1	
21104/12	**Bolt,** securing Cap to Bracket		2	
430241/04	**Washer,** Spring, on Bolt		2	
430711	**Washer,** on Control Tube under Bottom Bracket	34—16	1	
430712	**Spring,** on Washer	34—17	1	
C.11820/6	**Palnut,** ½″ U.N.F. on Control Tube	34—18	2	
428608	**CONTROL LEVER AT BOTTOM OF CONTROL TUBE**	34—19	1	**R.H. DRIVE ONLY**
307698	**CONTROL LEVER AT BOTTOM OF CONTROL TUBE**		1	**L.H. DRIVE ONLY**
422510/12	**Key,** locating Control Lever on Control Tube	34—20	1	
11104/08	**Bolt,** securing Control Lever to Control Tube		1	
430196	**CONTACT ADJUSTER**	34—21	1	
422543/1	**Nut,** securing Contact Adjuster	34—22	1	
306304	**SWITCH FOR REVERSE LIGHT IN BOTTOM BRACKET (31542-SS.10-1)**	34—23	1	**Superseded by Switch 308374**
306304	**SWITCH FOR SOLENOID CIRCUIT BREAKER IN BOTTOM BRACKET (31542-SS.10-1)**	34—24	1	

GEAR SELECTOR CONTROL

Part No.	Description	Plate No.	No. per Unit	Remarks
308374	**SWITCH FOR REVERSE LIGHT IN BOTTOM BRACKET (31824-SS.10-1)**	34—23	1	
308374	**SWITCH FOR SOLENOID CIRCUIT BREAKER IN BOTTOM BRACKET (31824-SS.10-1)**	34—24	1	
422508/28	**Washer,** Shakeproof, on Switches		2	
423025	**BELL CRANK LEVER ASSEMBLY ON DASH**	34—25	1	
0709/20	**Bush,** in Lever		1	
417291	**SUPPORT AND PIN ASSEMBLY FOR BELL CRANK LEVER ON DASH**			
428549	**Distance Piece,** between Support and Dash	34—27	1	
12104/06	**Screw,** Set, securing Support to Dash		3	
430241/04	**Washer,** Spring, on Setscrew		3	
427939	**Spring,** retaining Bell Crank Lever	34—28	1	R.H. DRIVE ONLY
427940	**Cup Washer,** positioning Spring on Support Pin	34—29	1	
430249	**Collar,** retaining Cup Washer	34—30	1	
422501/15	**Split Pin,** securing Collar		1	
422542/50	**CONTROL ROD (HORIZONTAL) SECURING CONTROL LEVER TO BELL CRANK LEVER ON DASH**	34—31	1	
428392	**Ball Joint Assembly,** on Control Rod	34—32	2	
13104	**Nut,** securing Ball Joints	34—33	4	
430241/04	**Washer,** Spring, under Nut		2	
430177	**BELL CRANK LEVER ASSEMBLY ON FRAME**	33—34	1	R.H. DRIVE ONLY
430996	**BELL CRANK LEVER ASSEMBLY ON FRAME**		1	L.H. DRIVE ONLY
0709/20	**Bush,** in Lever		1	

GEAR SELECTOR CONTROL

Part No.	Description	Plate No.	No. per Unit	Remarks
417291	**SUPPORT AND PIN ASSEMBLY FOR BELL CRANK LEVER ON FRAME**	34—35	1	
12104/05	**Screw,** Set, securing Support to Frame		3	
13104	**Nut,** on Setscrews		3	
430241/04	**Washer,** Spring, under Nut		3	
427939	**Spring,** retaining Bell Crank Lever	34—36	1	
427940	**Cup Washer,** retaining Spring on Support Pin	34—37	1	
430249	**Collar,** retaining Cup Washer	34—38	1	
422501/15	**Split Pin,** securing Collar		1	
422542/43	**CONTROL ROD (VERTICAL) SECURING BELL CRANK LEVERS (DASH TO FRAME)**	34—39	1	**R.H. DRIVE ONLY**
422542/50	**CONTROL ROD (VERTICAL) SECURING CONTROL LEVER TO BELL CRANK LEVER (FRAME)**		1	**L.H. DRIVE ONLY**
428392	**Ball Joint Assembly,** on Control Rod	34—40	2	
13104	**Nut,** securing Ball Joints	34—41	4	
430241/04	**Washer,** Spring, under Nut		2	
422542/36	**CONTROL ROD, SECURING BELL CRANK LEVER ON FRAME TO SELECTOR LEVER ON GEARBOX**	34—42	1	
430178	**Bush,** for Ball Pin in Selector Lever	34—43	1	
428392	**Ball Joint Assembly,** on Control Rod	34—44	2	
13104	**Nut,** securing Ball Joints	34—45	4	
430241/04	**Washer,** Spring, under Nut		2	

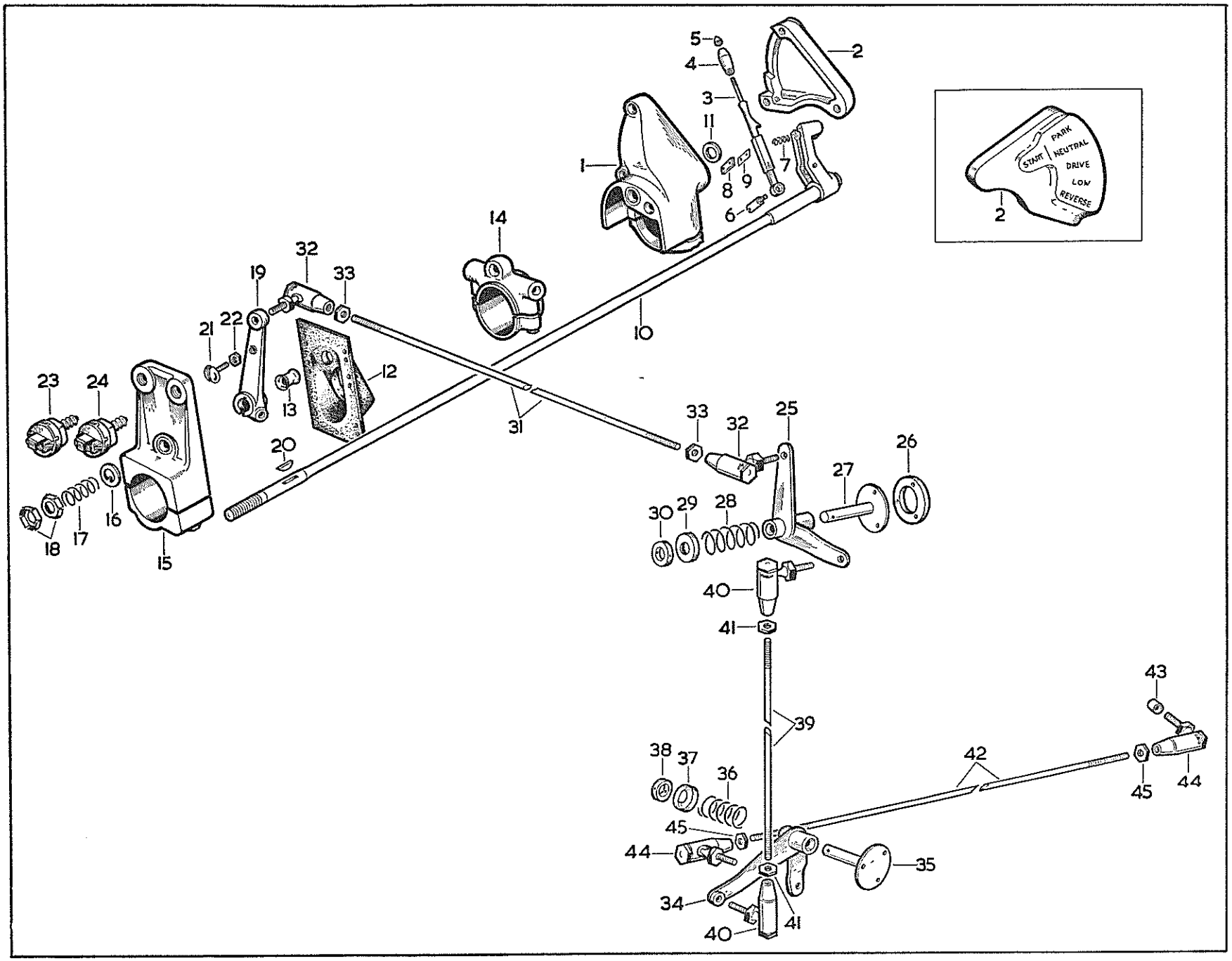

PLATE 34

COOLING SYSTEM

Part No.	Description	Plate No.	No. per Unit	Remarks
135963	**RADIATOR BLOCK ASSEMBLY**	35—1	1	**For DF.316/7 only**
308272	**Filler Cap** (1571515)	35—2	1	
136230	**RADIATOR BLOCK ASSEMBLY**		1	**For DF.318/9 only**
308272	**Filler Cap** (1571515)	35—2	1	
26200	**RADIATOR CRADLE ASSEMBLY**	35—3	1	
135966	**Fixing Bracket,** R.H. Side for Front Cover		1	
135967	**Fixing Bracket,** L.H. Side for Front Cover		1	
13104	**Nut,** securing Radiator Cradle to Fixing Bracket		6	
430241/04	**Washer,** Spring, under Nut		6	
11104/05	**Bolt,** securing Front Cover to Bracket		6	
422500/03	**Washer,** Plain, on Bolt		6	
430241/04	**Washer,** Spring, on Bolt		6	
135960	**FAN COWL**		1	Fitted from Chassis No. 98300 to 99060 (DF.316) 98750 to 98759 (DF.317)
136229	**FAN COWL**	35—4	1	Fitted to Chassis No. 99061 and subs. (DF.316) 98760 and subs. (DF.317) 99300 and subs. (DF.318) 99780 and subs. (DF.319)
12104/04	**Screw,** Set, securing Radiator Block and Fan Cowl to Cradle		8	
422500/03	**Washer,** Plain, on Setscrew		8	
430241/04	**Washer,** Spring, on Setscrew		8	
422505/11	**DRAIN TAP FOR RADIATOR**	35—5	1	
424830	**Extension,** for Drain Tap	35—6	1	
424775	**Washer,** Copper, on Tap and Extension	35—7	2	

COOLING SYSTEM

Part No.	Description	Plate No.	No. per Unit	Remarks
411744	**HOSE, TOP WATER CONNECTION**	35—8	1	
423176/24	**Clip,** securing Hose to Thermostat Outlet Pipe and Radiator Inlet Pipe	35—9	2	
425870	**HOSE, BOTTOM WATER CONNECTION**	35—10	2	
304783	**Water Pipe,** Bottom	35—11	1	
423176/26	**Clip,** securing Hose to Radiator, Water Pipe, and Water Pump	35—12	4	
401578	**RUBBER, MOUNTING RADIATOR TOP**	35—13	2	
402194	**RUBBER, MOUNTING RADIATOR BOTTOM**	35—14	2	
11106/16	**Bolt,** securing Radiator to Frame Bracket		2	
422514/07	**Nut,** Nyloc, on Bolt		2	
422500/05	**Washer,** Plain, under Nut		2	

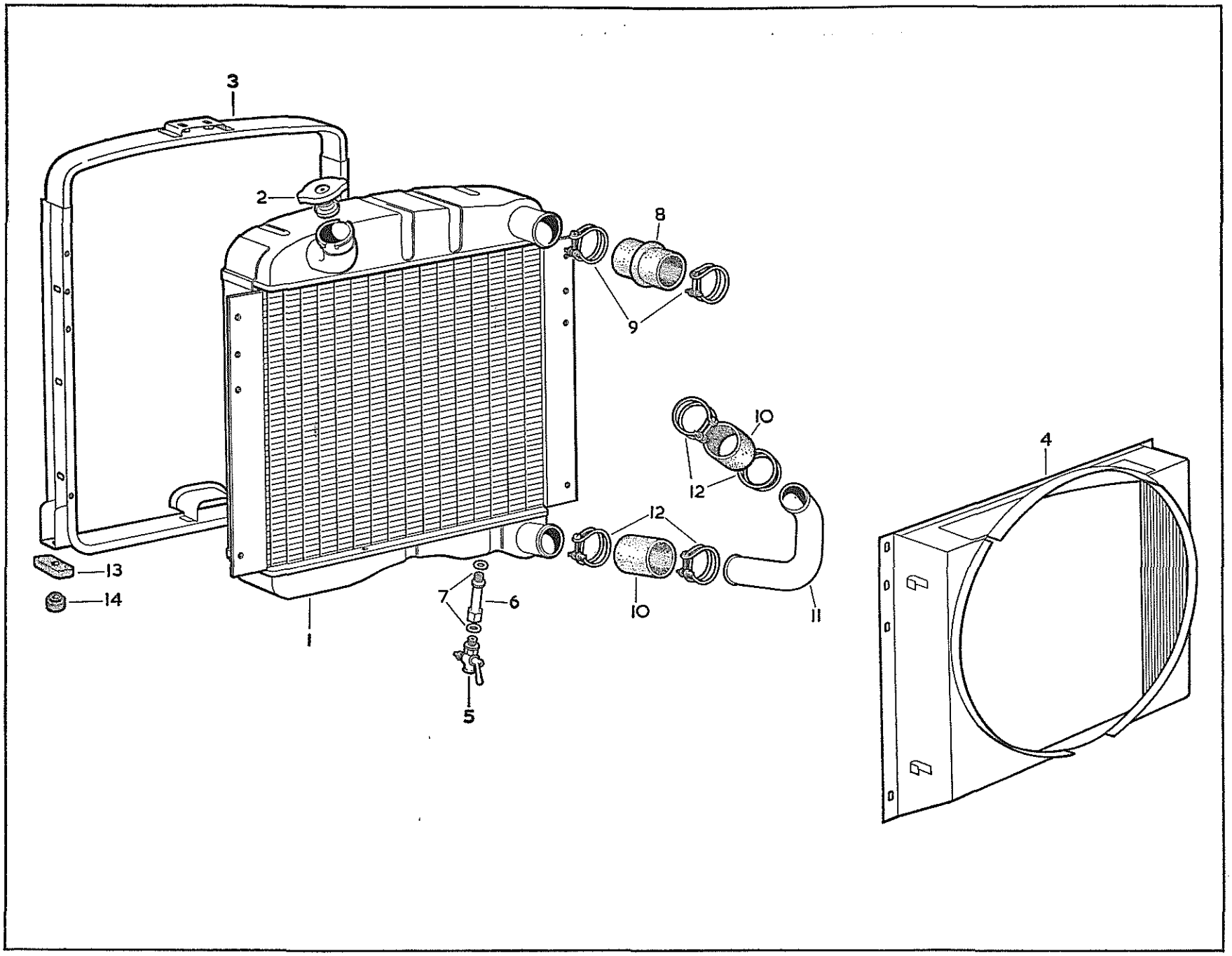

PLATE 35

EXHAUST SYSTEM

Part No.	Description	Plate No.	No. per Unit	Remarks
135178	**FRONT EXHAUST PIPE ASSEMBLY**	36—1	1	**FITTED WITH CAST OIL SUMP**
136206	**FRONT EXHAUST PIPE ASSEMBLY**	36—1	1	**FITTED WITH STEEL OIL SUMP**
422468	**Gasket,** between Manifold and Front Exhaust Pipe	36—2	2	
11105/10	**Bolt,** securing Manifold to Exhaust Pipe		6	
422512/06	**Nut,** on Bolt		6	
305465	**INTERMEDIATE EXHAUST PIPE**	33—3	1	
426926	**Gasket,** between Front Exhaust Pipe and Intermediate Exhaust Pipe	33—4	1	
11105/09	**Bolt,** securing Front to Intermediate Exhaust Pipe		3	
422512/06	**Nut,** on Bolt		3	
428381	**CARRIER ASSEMBLY FOR INTERMEDIATE EXHAUST PIPE**	36—5	2	
422512/06	**Nut,** securing Carrier to Bracket		2	
427795	**Hanger,** supporting Exhaust Pipe	36—6	2	
12105/05	**Bolt,** securing Hanger to Carrier		2	
422512/06	**Nut,** on Bolt		2	
426943	**' U ' Bolt,** for Hanger	36—7	2	
422512/05	**Nut,** on ' U ' Bolt		4	
135462	**EXHAUST SILENCER AND TAIL PIPE ASSEMBLY**	36—8	1	
426926	**Gasket,** between Intermediate Exhaust Pipe and Silencer	36—9	1	
11105/09	**Bolt,** securing Intermediate Exhaust Pipe to Silencer		3	
422512/06	**Nut,** on Bolt		3	
426375	**HANGER AT REAR OF SILENCER**	36—10	1	
425406	**Support Strip,** for Hanger	36—11	1	
12106/06	**Screw,** Set, securing Strip to Hanger		2	
422512/07	**Nut,** on Setscrew		2	
425089	**Washer,** under Nut		2	
422693	**' U ' Bolt,** for Hanger	36—12	1	
422512/05	**Nut,** on ' U ' Bolt		2	

EXHAUST SYSTEM

Part No.	Description	Plate No.	No. per Unit	Remarks
304880	**HANGER FOR TAIL PIPE**	36—13	1	
425188	**Bush,** Rubber, on each face of Hanger	36—14	2	
425187	**Washer,** retaining Bush	36—15	1	
425189	**Distance Tube**	36—16	1	
423563	**Bolt,** supporting Hanger		1	
13306	**Nut,** on Bolt		1	
422501/07	**Split Pin,** retaining Nut		1	
422693	**' U ' Bolt,** for Hanger	36—17	1	
422512/05	**Nut,** on ' U ' Bolt		2	

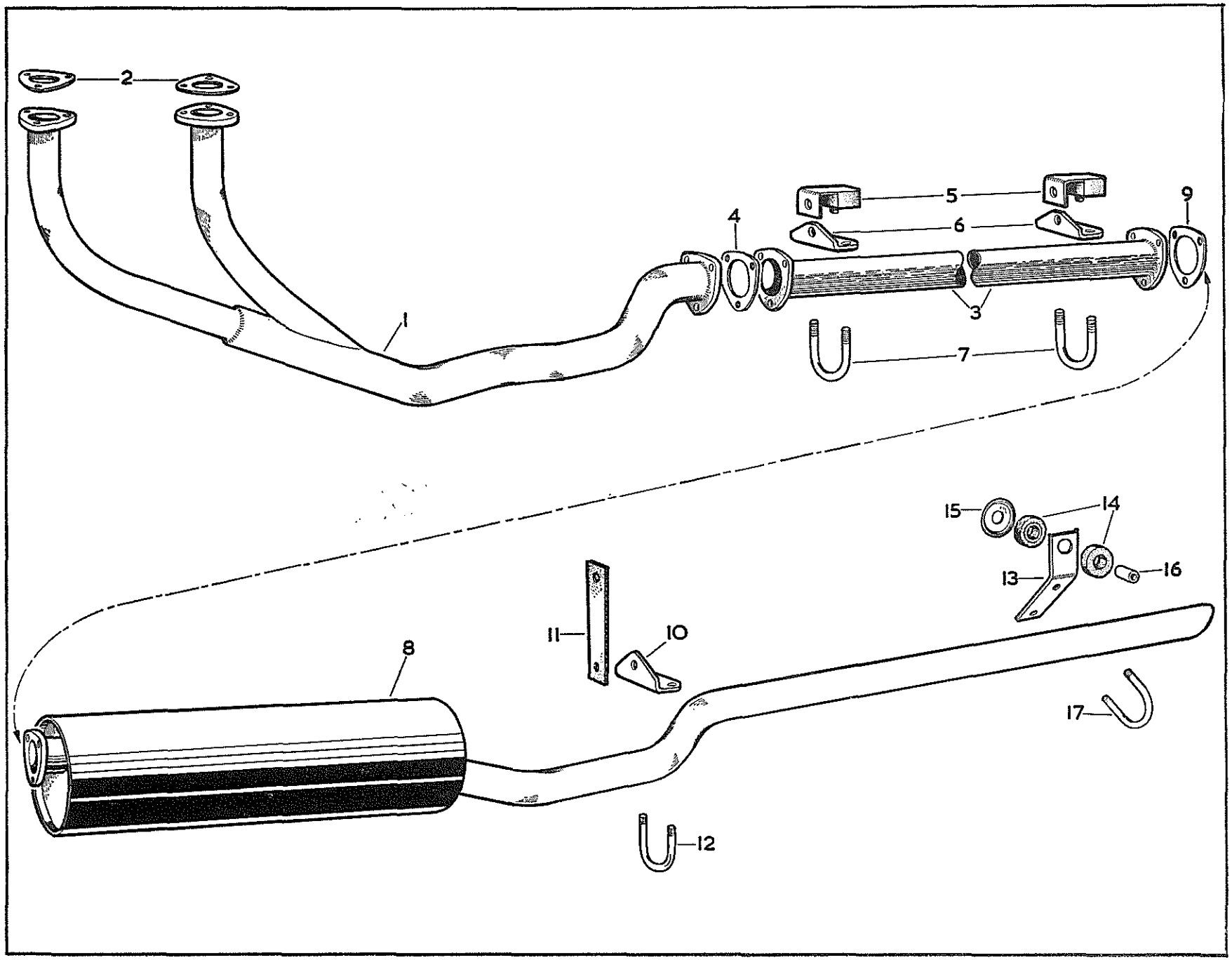

PLATE 36

FUEL SYSTEM

Part No.	Description	Plate No.	No. per Unit	Remarks
134856	**PETROL TANK**		1	Fitted from Chassis No. 98300 to 98550 (DF.316)
136009	**PETROL TANK**	37—1	1	Fitted to Chassis No. 98551 and subs. (DF.316) 98750 and subs. (DF.317)
136288	**PETROL TANK**		1	Fitted to DF.318/9 only
426867	**Drain Plug**	37—2	1	
422530/04	**Gasket,** on Plug	37—3	1	
426289	**MAIN OUTLET PIPE ASSEMBLY FROM PETROL TANK**	37—4	1	
426290	**RESERVE OUTLET PIPE ASSEMBLY FROM PETROL TANK**	37—5	1	
405481	**Washer** (Copper) for Outlet Pipes	37—6	2	
428442	**PIPE FOR AIR VENT**		1	Fitted from Chassis No. 98300 to 98550 (DF.316)
428361	**Hose,** for Air Vent Pipe		2	
423176/04	**Clip,** securing Hose		4	
428444	**Clip,** securing Pipe to Tank		1	
12104/04	**Screw,** Set, securing Clip		1	
430241/04	**Washer,** Spring, on Setscrew		1	
307877	**PIPE FOR AIR VENT**	37—7	1	Fitted to Chassis No. 98551 and subs. (DF.316) 98750 and subs. (DF.317) also to all DF.318/9
428361	**Hose,** for Air Vent Pipe	37—8	2	
423176/04	**Clip,** securing Hose	37—9	4	
431250	**Clip,** securing Pipe to Tank	37—10	1	
12104/04	**Screw,** Set, securing Clip		1	
430241/04	**Washer,** Spring, on Setscrew		1	

Part No.	Description	Plate No.	No. per Unit	Remarks
428393	**HOSE, CONNECTING PETROL TANK TO FILLER NECK**		1	Fitted from Chassis No. 98300 to 98550 (DF.316)
431399	**HOSE, CONNECTING PETROL TANK TO FILLER NECK**	37—11	1	Fitted to Chassis No. 98551 and subs. (DF.316) 98750 and subs. (DF.317) also to all DF.318/9
423176/32	**Clip,** securing Hose	37—12	2	
306330	**FILLER NECK ASSEMBLY**		1	Fitted from Chassis No. 98300 to 98550 (DF.316)
271768	**PETROL FILLER CAP**		1	Fitted from Chassis No. 98300 to 98550 (DF.316)
428742	**Spring,** on Petrol Filler Cap		1	
430304	**Washer,** on Petrol Filler Cap		1	
309016	**PETROL FILLER CAP ASSEMBLY**	37—13	1	Fitted to Chassis No. 98551 and subs. (DF.316) 98750 and subs. (DF.317) also to all DF.318/9
432988	**Valve Assembly,** in Filler Cap		1	
426084/26	**Screw,** securing Valve Assembly		1	
430241/03	**Washer,** Spring on Screw		1	
307815	**Grommet,** for Petrol Filler Cap	37—14	1	
431137	**Grommet Ring,** for Petrol Filler Cap	37—15	1	
304826	**PETROL TANK GAUGE UNIT (AC.7228110)**	37—16	1	Fitted to DF.316/7 only
424782	**Gasket,** under Gauge Unit	37—17	1	
425516	**Screw,** securing Gauge Unit		6	
304062	**Rubber Boot,** over Gauge Unit Terminal	37—18	1	
308362	**PETROL TANK GAUGE UNIT (FT.5301/10)**		1	Fitted to DF.318/9 only
C.937	**Gasket,** under Gauge Unit		1	
425516	**Screw,** securing Gauge Unit to Tank		6	
304062	**Rubber Boot,** over Gauge Unit Terminal		1	

FUEL SYSTEM

Part No.	Description	Plate No.	No. per Unit	Remarks
134580	**PETROL PIPE ASSEMBLY (MAIN) FROM PETROL TANK**	37—19	1	
134578	**PETROL PIPE ASSEMBLY (RESERVE) FROM PETROL TANK**	37—20	1	
425774	**Olive,** on Pipe		4	
425773	**Union Nut,** securing Pipes to Tank Outlets		2	
426365	**Union,** at Connection to Front Pipe		2	
424751	**Clip,** securing Pipes to Wheel Arch	37—21	1	
12104/04	**Screw,** Set, securing Clip		1	
13104	**Nut,** on Setscrew		1	
430241/04	**Washer,** Spring, under Nut		1	
416337	**Clip,** securing Pipes to Frame Side Member	37—22	5	
422544/9	**Bolt,** securing Clips		5	
422543/2	**Nut,** on Bolt		5	
430241/03	**Washer,** Spring, under Nut		5	
135211	**PETROL PIPE ASSEMBLY (MAIN) TO PETROL TAP ASSEMBLY**	37—23	1	
135210	**PETROL PIPE ASSEMBLY (RESERVE) TO PETROL TAP ASSEMBLY**	37—24	1	
424729	**Olive,** to Reserve Petrol Tap		2	
424748	**Union Nut,** securing Pipes to Reserve Petrol Tap		2	
425774	**Olive,** to Rear Pipes		2	
425773	**Union Nut,** securing Front and Rear Pipes		2	
416337	**Clip,** securing Pipes to Frame Side Member	37—22	3	
422544/9	**Bolt,** securing Clips		3	
422543/2	**Nut,** on Bolt		3	
430241/03	**Washer,** Spring, under Nut		3	
288945	**PETROL RESERVE TAP ASSEMBLY**	37—25		
424747	**Cork Bush**			
424728	**Operating Lever,** for Reserve Tap	37—26	1	
404995	**Link,** connecting Lever to Plunger	37—27	1	
285473	**Pin,** for Lever Fulcrum	37—28	3	
422501/03	**Split Pin,** securing Pin		3	

Part No.	Description	Plate No.	No. per Unit	Remarks
424729	**BRACKET SUPPORTING ABUTMENT FOR PETROL RESERVE CABLE**	37—29	1	
428550	**Packing Piece,** between Reserve Tap and Frame	37—30	1	
12105/07	**Screw,** Set, securing Bracket to Frame		2	
13105	**Nut,** on Setscrew		2	
430241/05	**Washer,** Spring, under Nut		2	
424766	**ABUTMENT FOR RESERVE TAP CABLE**	37—31	1	
422544/9	**Bolt,** securing Abutment to Support Bracket		1	
422543/2	**Nut,** on Bolt		1	
430241/03	**Washer,** under Nut		1	
307759/02	**CONTROL CABLE FOR PETROL RESERVE (32558)**	37—32	1	
222/148	**Knob,** for Control Cable		1	
426596	**PETROL TAP ASSEMBLY (2516B)**	37—33	1	
426695	**Cork Bush**		1	
426714	**Tube,** for Petrol Tap Assembly	37—34	1	
418316	**Olive,** on Tube	37—35	1	
425822/05	**FLEXIBLE PETROL PIPE FROM PETROL TAP TO PETROL PUMP**	37—36	1	
418316	**Olive,** between Flexible Pipe and Tap	37—37	1	
418317	**Union Nut,** securing Flexible Pipe to Petrol Tap	37—38	1	
422890	**Olive,** between Flexible Pipe and Pump	37—39	1	
422786	**Union Nut,** securing Flexible Pipe to Petrol Pump	37—40	1	

FUEL SYSTEM

Part No.	Description	Plate No.	No. per Unit	Remarks
133007	**PETROL PUMP ASSEMBLY (1524750-UE)**	37—41	1	
133007/14	**Filter** (854009)		1	
133007/13	**Gasket,** between Bowl and Upper Casting (5593321)		1	
133007/12	**Glass Bowl** (1523620)		1	
133007/03	**Diaphragm** (1524628)		1	
133007/04	**Spring,** for Diaphragm (1524013)		1	
133007/01	**Valve,** in Upper Casting (5591860)		2	
133007/02	**Gasket,** for Valves (1537404)		1	
133007/15	**Screw,** securing Top Casting to Body (855493)		6	
133007/16	**Washer,** on Screws (114648)		6	
133007/10	**Return Spring,** for Priming Lever (1524463)		1	
133007/06	**Spring,** for Rocker Arm (856927)		1	
133007/09	**Link,** for Rocker Arm (856961)		1	
133007/05	**Rocker Arm** (1524151)		1	
133007/08	**Circlip,** on Rocker Arm Pin (1524112)		2	
133007/07	**Pin,** holding Rocker Arm (856035)		1	
425103	**Gasket,** between Petrol Pump and Cylinder Block (1524686)	37—42	1	
21105/08	**Bolt,** securing Petrol Pump to Cylinder Block		2	
430241/05	**Washer,** Spring, on Bolt		2	
135373	**PETROL PIPE FROM PETROL PUMP TO FRONT CARBURETTER**	37—43	1	
422519/06	**Nipple,** on Petrol Pipe		1	
422520/04	**Union Nut,** securing Petrol Pipe to Carburetter		1	
422890	**Olive,** on Petrol Pipe		1	
422786	**Union Nut,** securing Petrol Pipe to Petrol Pump		1	
306127	**PETROL PIPE ASSEMBLY LINKING CARBURETTERS**	37—44	1	
422519/06	**Nipple,** on Petrol Pipe		2	
422520/04	**Union Nut,** securing Petrol Pipe to Carburetters		2	

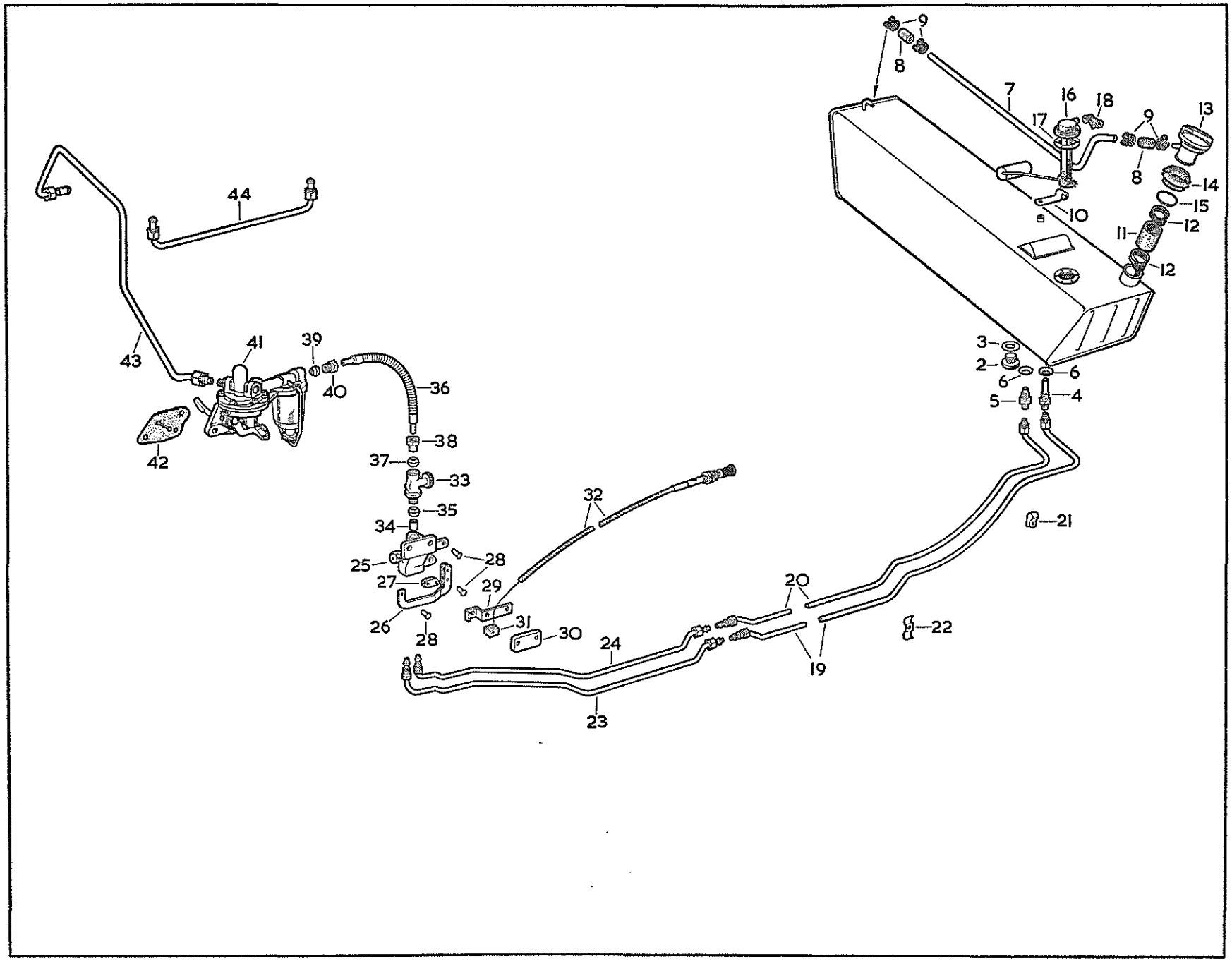
9
8
7
16
18
17
9
13
8
14
15
10
11
12
12
44
43
41
39
40
36
38
37
33
35
34
25
28
27
29
26
28
32
31
30
24
23
20
19
3
2
6
6
5
4
21
22

PLATE 37

CHASSIS

Part No.	Description	Plate No.	No. per Unit	Remarks
26205	**CHASSIS FRAME ASSEMBLY**	38—1	1	
420903	**Tapped Plate,** for Anti-Roll Bar		2	
420902	**Stiffening Plate,** for Steering Box Bracket		2	
420901	**Tube,** for Steering Box Bracket		2	
422635	**Frame Stiffener,** for Front Bumper		2	
426608	**Jack Tube**		2	
424888	**Mounting Bracket,** for Horns		2	
420953	**Cross Tube,** Front		1	
422769	**Bracket,** Supporting Radiator Cradle		2	
423441	**Abutment Bracket,** for Hydraulic Brake Pipe, Front		2	
303881	**Bracket,** R.H., for Top Transverse Link		1	
303882	**Bracket,** L.H., for Top Transverse Link		1	
427857	**Support Bracket,** for Tee Piece		1	
135074	**Support Bracket,** R.H., Front of Engine		1	
135075	**Support Bracket,** L.H., Front of Engine		1	
305588	**Support Bracket,** R.H., for Gearbox		1	
305589	**Support Bracket,** L.H., for Gearbox		1	
303735	**Bracket,** for Shock Absorber		2	
427359	**Abutment Bracket,** for Hydraulic Brake Pipe—Rear		1	
420962	**Cross Tube, Rear**		1	
427443	**Support,** for Exhaust Pipe Hanger, Front and Intermediate		2	
425404	**Support,** for Exhaust Pipe Hanger, Rear		1	
135355	**Bracket Assembly,** No. 1, Body Mounting, R.H.		1	
135352	**Bracket Assembly,** No. 1, Body Mounting, L.H.		1	
303902	**Bracket,** Nos. 2 and 3, Body Mounting, Outer		4	
424868	**Bracket Assembly,** No. 2, Body Mounting, Inner		2	
135982	**Bracket Assembly,** No. 4, Body Mounting and Jack Tube, R.H.		1	
135983	**Bracket Assembly,** No. 4, Body Mounting and Jack Tube, L.H.		1	
303943	**BRACKET MOUNTING STEERING BOX**	38—2	1	
303944	**Cap,** for Bracket	38—3	1	
13312	**Nut,** securing Bracket to Frame		1	
422500/08	**Washer,** Plain, under Nut		1	
422501/33	**Split Pin,** securing Nut		1	
11107/14	**Bolt,** securing Cap to Bracket		2	
430241/07	**Washer,** Spring, on Bolts		2	
133908	**BOTTOM PLATE FOR FRONT CROSS MEMBER**	38—4	1	
12105/05	**Screw,** Set, securing Bottom Plate to Front Cross Member		8	
13105	**Nut,** on Setscrews		9	
430241/05	**Washer,** Spring, under Nuts		9	
304763	**BRACKET ASSEMBLY FOR R.H. FRONT ENGINE MOUNTING**	38—5	1	

Part No.	Description	Plate No.	No. per Unit	Remarks
304765	**BRACKET ASSEMBLY FOR L.H. FRONT ENGINE MOUNTING**	38—6	1	**R.H. DRIVE ONLY**
305481	**BRACKET ASSEMBLY FOR L.H. FRONT ENGINE MOUNTING**		1	**L.H. DRIVE ONLY**
426231	**Distance Piece,** for L.H. Front Engine Mounting Bracket	38—7	1	
401182	**Support Plate,** for Bracket		As req'd	
22106/07	**Screw,** Set, securing Brackets to Engine		4	
22106/09	**Screw,** Set, securing Brackets to Engine		4	
430241/06	**Washer,** Spring, on Setscrews		8	
401183	**FRONT ENGINE MOUNTING**	38—8	2	
11105/06	**Bolt,** securing Bracket Assembly to Front Support Plate		4	
11105/07	**Bolt,** securing Bracket Assembly to Frame		4	
422514/06	**Nut,** Nyloc, on Bolts		8	
307209	**BRACKET BETWEEN GEAR SELECTOR BELL CRANK LEVER SUPPORT AND FRAME**	38—9	1	
12105/06	**Screw,** Set, securing Bracket to Frame		3	
13105	**Nut,** on Setscrews		3	
430241/05	**Washer,** Spring, under Nuts		3	
134507	**SUPPORT MEMBER FOR GEARBOX**	38—10	1	
11106/07	**Bolt,** securing Support Member to Cruciform		4	
422514/07	**Nut,** Nyloc, on Bolts		4	
422500/03	**Washer,** Plain, under Nuts		4	
423272/01	**GEARBOX CONE RUBBER MOUNTING (METALASTIK)**	38—11	2	
430203	**Distance Piece,** for Mountings	38—12	2	
423356	**Bolt,** securing Mountings to Gearbox		2	
13308	**Nut,** on Bolts		2	
422501/16	**Split Pin,** securing Nuts		2	
11106/06	**Bolt,** securing Mountings to Support		4	
422514/07	**Nut,** Nyloc, on Bolts		4	

Part No.	Description	Plate No.	No. per Unit	Remarks
306181	**BUMP STOP FOR REAR AXLE NOSE-PIECE**	38—13	1	
11104/06	**Bolt,** securing Buffer to Support Brackets		2	
13104	**Nut,** on Bolts		2	
430241/04	**Washer,** Spring, under Nuts		2	
423312	**BUMP STOP FOR REAR AXLE**	38—14	2	
13106	**Nut,** securing Buffers to Frame Side Members		2	
430241/06	**Washer,** Spring, under Nuts		2	
400487	**BUMP STOP FOR FRONT SUSPENSION**	38—15	2	
11105/05	**Bolt,** securing Buffers to Frame		4	
13105	**Nut,** on Bolts		4	
430241/05	**Washer,** Spring, under Nuts		4	
135311	**SPARE WHEEL TRAY**	38—16	1	
426314	**Pivot Bolt,** for Spare Wheel Tray	38—17	2	
13308	**Nut,** on Pivot Bolts		2	
422540/10	**Washer,** D.C. Spring, on Bolts		2	
422501/16	**Split Pin,** securing Nuts		2	
427848	**Actuating Bolt Assembly**	38—18	1	
13106	**Nut,** on Actuating Bolt		1	
422500/03	**Washer,** Plain, under Nut		1	
422508/21	**Washer,** Shakeproof, under Nut		1	
427849	**Actuating Nut**	38—19	1	
426306	**Bush,** locating Actuating Nut	38—20	1	
428448	**Cap,** protecting Actuating Nut	38—21	1	
428449	**Plate,** retaining Protecting Cap	38—22	1	
426933/33	**Screw,** securing Retaining Plate		3	
426935/4	**Nut,** on Screws		3	
422508/09	**Washer,** Shakeproof, under Nuts		3	
425203	**BUFFER ASSEMBLY FOR SPARE WHEEL TRAY**	38—23	2	
428737	**Packing Piece,** for Buffers	38—24	2	
12104/05	**Screw,** Set, securing Buffers and Packing Pieces		4	
13104	**Nut,** on Setscrews		4	
422508/18	**Washer,** Shakeproof, on Setscrews		4	

Part No.	Description	Plate No.	No. per Unit	Remarks
430777	**REAR SPRING ASSEMBLY**	38—25	2	
430894	**Main Leaf,** complete with Bushes		2	
430532	**Bush,** in Spring Eye (Metalastik 13/691)		4	
424804	**' U ' Bolt,** securing Rear Springs to Rear Axle	38—26	4	
422514/08	**Nut,** Nyloc, on ' U ' Bolts		8	
424803	**Bottom Plate,** for Springs	38—27	2	
430785	**BRACKET SECURING REAR SPRING FRONT EYE TO FRAME**	38—28	2	
11106/09	**Bolt,** securing Brackets to Frame		8	
422514/07	**Nut,** Nyloc, on Bolts		8	
430907	**REAR SPRING SHACKLE AND BUSH ASSEMBLY**	38—29	2	
420537	**Bush,** in Shackle (Metalastik 13/797)		2	
11110/54	**Bolt,** securing Spring Shackles to Frame		2	
422514/11	**Nut,** Nyloc, on Bolts		2	
422500/07	**Washer,** Plain, under Nuts		2	
11108/30	**EYE BOLT SECURING REAR SPRING TO FRAME AND SPRING SHACKLES**	38—30	4	
422514/09	**Nut,** Nyloc, on Eye Bolts		4	
302122	**FRONT SHOCK ABSORBERS (TYPE 14535)**	38—31	2	
302122/01	**Rubber Buffer,** at top of Shock Absorbers (9405)		4	
302122/02	**Rubber Bush,** at bottom of Shock Absorbers (12123)		4	
423133	**Bolt,** securing Shock Absorber to Transverse Link		2	
423137	**Bush,** on Bolts		2	
13310	**Nut,** Slotted, on Bolts		2	
422500/07	**Washer,** Plain, under Nuts		2	
422501/25	**Split Pin,** retaining Nuts		2	

Part No.	Description	Plate No.	No. per Unit	Remarks
302918	**REAR SHOCK ABSORBERS (TYPE 14565)**	38—32	2	
302122/01	**Rubber Buffer,** at top of Shock Absorber (9405)		4	
302122/02	**Rubber Bush,** at bottom of Shock Absorber (12123)		4	
423681	**Bolt,** securing Shock Absorber to Spring Bracket		2	
423674	**Bush,** on Bolt		2	
13310	**Nut,** Slotted, on Bolt		2	
422500/07	**Washer,** Plain under Nut		2	
422501/25	**Split Pin,** retaining Nut		2	
302153	**BRACKET, SECURING FRONT SHOCK ABSORBER TO FRAME**	38—33	2	
302154	**BRACKET, LOCATING FRONT SUSPENSION SPRING**	38—34	2	
422974	**Bolt,** securing Brackets to Frame		8	
430241/06	**Washer,** Spring, on Bolt		8	

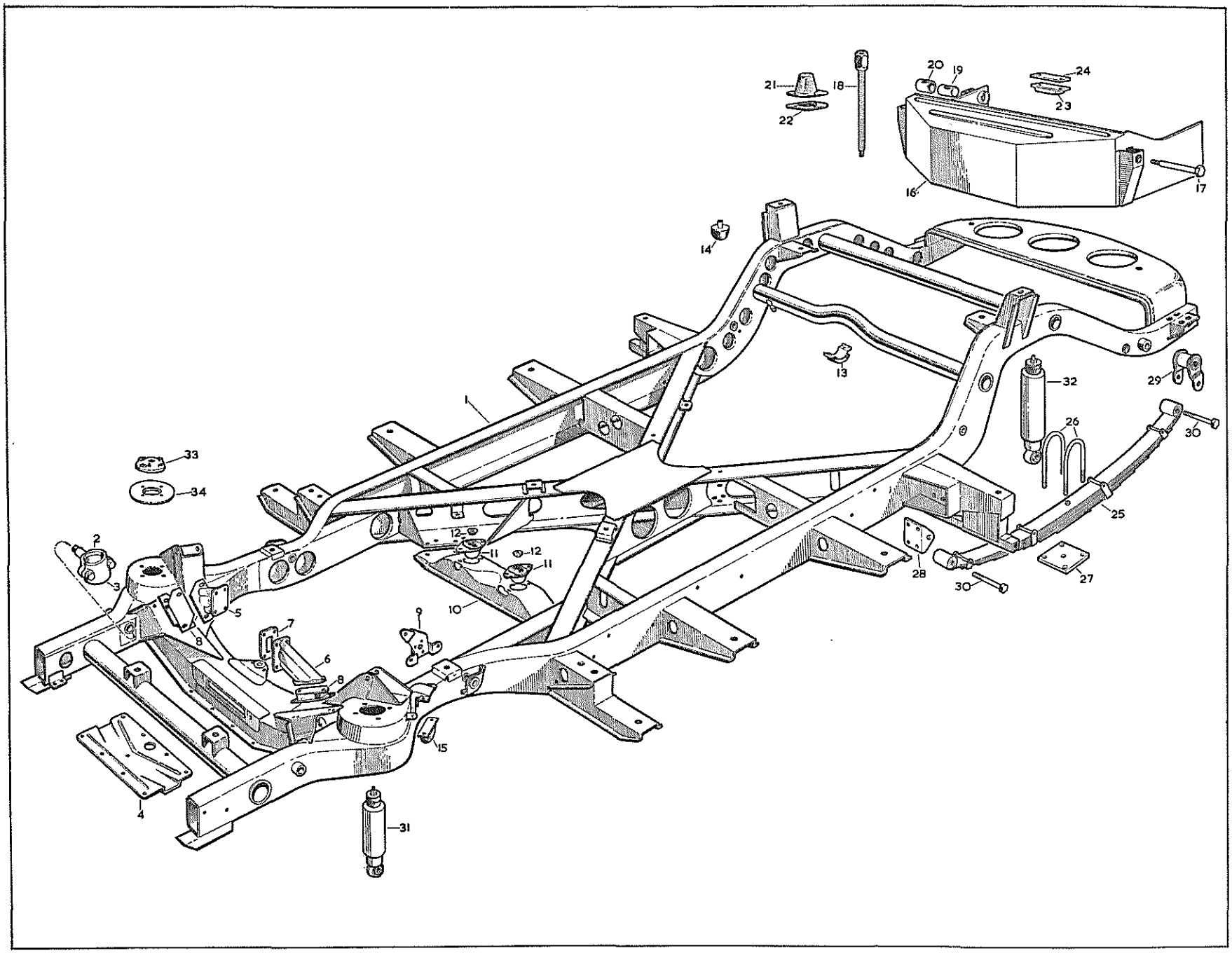
1
2
3
4
5
6
7
8
9
10
11
12
13
14
15
16
17
18
19
20
21
22
23
24
25
26
27
28
29
30
31
32
33
34

PLATE 38

CHASSIS

Part No.	Description	Plate No.	No. per Unit	Remarks
26227	**CHASSIS FRAME ASSEMBLY**	39—1	1	
420903	**Tapped Plate,** for Anti-Roll Bar		2	
420902	**Stiffening Plate,** for Steering Box Bracket		2	
420901	**Tube,** for Steering Box Bracket		2	
422635	**Frame Stiffener,** for Front Bumper		2	
426608	**Jack Tube**		2	
424888	**Mounting Bracket,** for Horns		2	
420953	**Cross Tube,** Front		1	
422769	**Bracket,** supporting Radiator Cradle		2	
432299	**Abutment Bracket,** for Front Brake Pipe, R.H.		1	
432298	**Abutment Bracket,** for Front Brake Pipe, L.H.		1	
308376	**Bracket,** Rebound Stop, R.H.		1	
308375	**Bracket,** Rebound Stop, L.H.		1	
303881	**Bracket,** R.H., for Top Transverse Link		1	
303882	**Bracket,** L.H., for Top Transverse Link		1	
427857	**Support Bracket,** for Tee Piece		1	
135074	**Support Bracket,** R.H. Front, for Engine		1	
135075	**Support Bracket,** L.H. Front, for Engine		1	
305588	**Support Bracket,** R.H., for Gearbox		1	
305589	**Support Bracket,** L.H., for Gearbox		1	
303735	**Bracket,** for Rear Shock Absorber		2	
427359	**Abutment Bracket,** for Hydraulic Brake Pipe, Rear		1	
420962	**Cross Tube,** Rear		1	
427443	**Support,** for Exhaust Pipe Hanger, Front and Intermediate		2	
425404	**Support,** for Exhaust Pipe Hanger, Rear		1	
135355	**Bracket Assembly,** No. 1 Body Mounting, R.H.		1	
135352	**Bracket Assembly,** No. 1 Body Mounting, L.H.		1	
303902	**Bracket Assembly,** No. 2 and 3 Body Mounting, Outer		4	
424868	**Bracket Assembly,** No. 2 Body Mounting, Inner		2	
135982	**Bracket Assembly,** No. 4 Body Mounting and Jack Tube, R.H.		1	
135983	**Bracket Assembly,** No. 4 Body Mounting and Jack Tube, L.H.		1	
303943	**BRACKET MOUNTING STEERING BOX**	39—2	1	
303944	**Cap,** for Bracket	39—3	1	
13312	**Nut,** securing Bracket and Frame		1	
422500/08	**Washer,** Plain, under Nut		1	
422501/33	**Split Pin,** securing Nut		1	
11107/14	**Screw,** Set, securing Cap to Bracket		2	
430241/07	**Washer,** Spring, on Setscrew		2	
133908	**BOTTOM PLATE FOR FRONT CROSS MEMBER**	39—4	1	
12105/05	**Screw,** Set, securing Bottom Plate to Front Cross Member		8	
13105	**Nut,** on Setscrews		9	
430241/05	**Washer,** Spring, under Nut		9	
304763	**BRACKET ASSEMBLY FOR R.H. FRONT ENGINE MOUNTING**	39—5	1	

Part No.	Description	Plate No.	No. per Unit	Remarks
308370	**BRACKET ASSEMBLY FOR L.H. FRONT ENGINE MOUNTING**	39—6	1	**R.H. DRIVE ONLY**
308368	**BRACKET ASSEMBLY FOR L.H. FRONT ENGINE MOUNTING**		1	**L.H. DRIVE ONLY**
401182	**Support Plate,** for Bracket		As req'd	
22106/07	**Screw,** Set, securing Bracket to Engine		8	
430241/06	**Washer,** Spring on Setscrews		8	
401183	**FRONT ENGINE MOUNTING**	39—7	2	
11105/06	**Bolt,** securing Bracket Assembly to Front Support Plate		4	
11105/07	**Bolt,** securing Bracket Assembly to Frame		4	
422514/06	**Nut,** Nyloc, on Bolt		8	
307209	**BRACKET, BETWEEN GEAR SELECTOR BELL CRANK LEVER SUPPORT AND FRAME**	39—8	1	
12105/06	**Screw,** Set, securing Bracket to Frame		3	
13105	**Nut,** on Setscrews		3	
430241/05	**Washer,** Spring, under Nuts		3	
134507	**SUPPORT MEMBER FOR GEARBOX**	39—9	1	
11106/07	**Bolt,** securing Support Bracket to Cruciform		4	
422514/07	**Nut,** Nyloc, on Bolts		4	
422500/03	**Washer,** Plain, under Nuts		4	
423272/01	**GEARBOX CONE RUBBER MOUNTING (METALASTIK)**	39—10	2	
430203	**Distance Piece,** for Mountings	39—11	2	
423356	**Bolt,** securing Mountings to Gearbox		2	
13308	**Nut,** on Bolts		2	
422501/16	**Split Pin,** securing Nut		2	
11106/06	**Bolt,** securing Mounting to Support		4	
422514/07	**Nut,** Nyloc, on Bolts		4	

CHASSIS

Part No.	Description	Plate No.	No. per Unit	Remarks
306181	**BUMPSTOP FOR REAR AXLE NOSE-PIECE**	39—12	1	
11104/06	**Bolt,** securing Buffers to Support Bracket		2	
13104	**Nut,** on Bolts		2	
430241/04	**Washer,** Spring, under Nuts		2	
423312	**BUMPSTOP FOR REAR AXLE**	39—13	2	
13106	**Nut,** securing Buffers to Frame Side Members		2	
430241/06	**Washer,** Spring, under Nuts		2	
400487	**BUMPSTOP FOR FRONT SUSPENSION**	39—14	2	
400486	**Packing Plate,** for Bumpstops		6	
11105/08	**Bolt,** securing Buffers and Packing Plates to Frame		4	
13105	**Nut,** on Bolts		4	
430241/05	**Washer,** Spring, under Nuts		4	
431458	**REBOUND STOP RUBBER ASSEMBLY**	39—15	2	
422514/07	**Nut,** securing Rebound Stop		2	
432496	**Washer,** Packing, under Nut		2	
432720	**STEERING LOCK STOP**	39—16	2	
12106/08	**Screw,** Set, securing Lockstop to Front of Front Cross Member		2	
430241/06	**Washer,** Spring, on Setscrews		2	
135311	**SPARE WHEEL TRAY**	39—17	1	
426314	**Pivot Bolt,** for Spare Wheel Tray	39—18	2	
13308	**Nut,** on Pivot Bolts		2	
422540/10	**Washer,** D.C. Spring, on Bolts		2	
422501/16	**Split Pin,** securing Nuts		2	
427848	**Actuating Bolt Assembly**	39—19	1	
13106	**Nut,** on Actuating Bolt		1	
422500/03	**Washer,** Plain, under Nut		1	
422508/21	**Washer,** Shakeproof, under Nut		1	
427849	**Actuating Nut**	39—20	1	
426306	**Bush,** locating Actuating Nut	39—21	1	
428448	**Cap,** protecting Actuating Nut	39—22	1	
428449	**Plate,** retaining Protecting Cap	39—23	1	
426933/33	**Screw,** securing retaining Plate		3	
426935/4	**Nut,** on Screws		3	
422508/09	**Washer,** Shakeproof, under Nut		3	

Part No.	Description	Plate No.	No. per Unit	Remarks
425203	**BUFFER ASSEMBLY FOR SPARE WHEEL TRAY**	39—24	2	
428737	**Packing Piece,** for Buffers	39—25	2	
12104/05	**Screw,** Set, securing Buffers and Packing Pieces		4	
13104	**Nut,** on Setscrews		4	
422508/18	**Washer,** Shakeproof, on Setscrews		4	
430777	**REAR SPRING ASSEMBLY**	39—26	2	
430894	**Main Leaf,** complete with Bushes		2	
430532	**Bush,** in Spring Eye (Metalastik No. 13/691)		4	
431544	**' U ' Bolt,** securing Rear Spring to Rear Axle	39—27	4	
422514/08	**Nut,** Nyloc, on ' U ' Bolts		8	
431545	**Bottom Plate,** for Springs	39—28	2	
430785	**BRACKET, SECURING REAR SPRING FRONT EYE TO FRAME**	39—29	2	
11106/09	**Bolt,** securing Bracket to Frame		8	
422514/07	**Nut,** Nyloc, on Bolts		8	
430907	**REAR SPRING SHACKLE AND BUSH ASSEMBLY**	39—30	2	
430537	**Bush,** in Shackle (Metalastik No. 13/797)		2	
11110/54	**Bolt,** securing Brackets to Frame		2	
422514/11	**Nut,** Nyloc, on Bolts		2	
422500/07	**Washer,** Plain, under Nuts		2	
11108/30	**EYE BOLT SECURING REAR SPRING TO FRAME AND SPRING SHACKLES**	39—31	4	
422514/09	**Nut,** Nyloc, on Eye Bolts		4	

CHASSIS

Part No.	Description	Plate No.	No. per Unit	Remarks
309020	**FRONT SHOCK ABSORBER (TYPE NF.4 No. 64054327)**	39—32	1	
C.10647	**Rubber Buffer,** at Top of Shock Absorber (9046/624)		4	
C.3273	**Rubber Bush,** at Bottom of Shock Absorber (9046/386)		4	
423133	**Bolt,** securing Shock Absorber to Transverse Link		2	
423137	**Bush,** on Bolts		2	
13310	**Nut,** Slotted, on Bolts		2	
422500/07	**Washer,** Plain, under Nuts		2	
422501/25	**Split Pin,** retaining Nuts		2	
308504	**REAR SHOCK ABSORBERS (TYPE NF.6 No. 64054261)**	39—33	2	
C.10647	**Rubber Buffer,** at top of Shock Absorber (9046/624)		4	
C.3273	**Rubber Bush,** at bottom of Shock Absorber (9046/386)		4	
423681	**Bolt,** securing Shock Absorber to Transverse Link		2	
423674	**Bush,** on Bolts		2	
13310	**Nut,** Slotted on Bolts		2	
422500/07	**Washer,** Plain, under Nuts		2	
422501/25	**Split Pin,** retaining Nuts		2	
305073	**BRACKET SECURING FRONT SHOCK ABSORBER TO FRAME**	39—34	2	
11106/08	**Bolt,** securing Bracket to Frame		6	
430241/06	**Washer,** Spring, on Bolts		6	

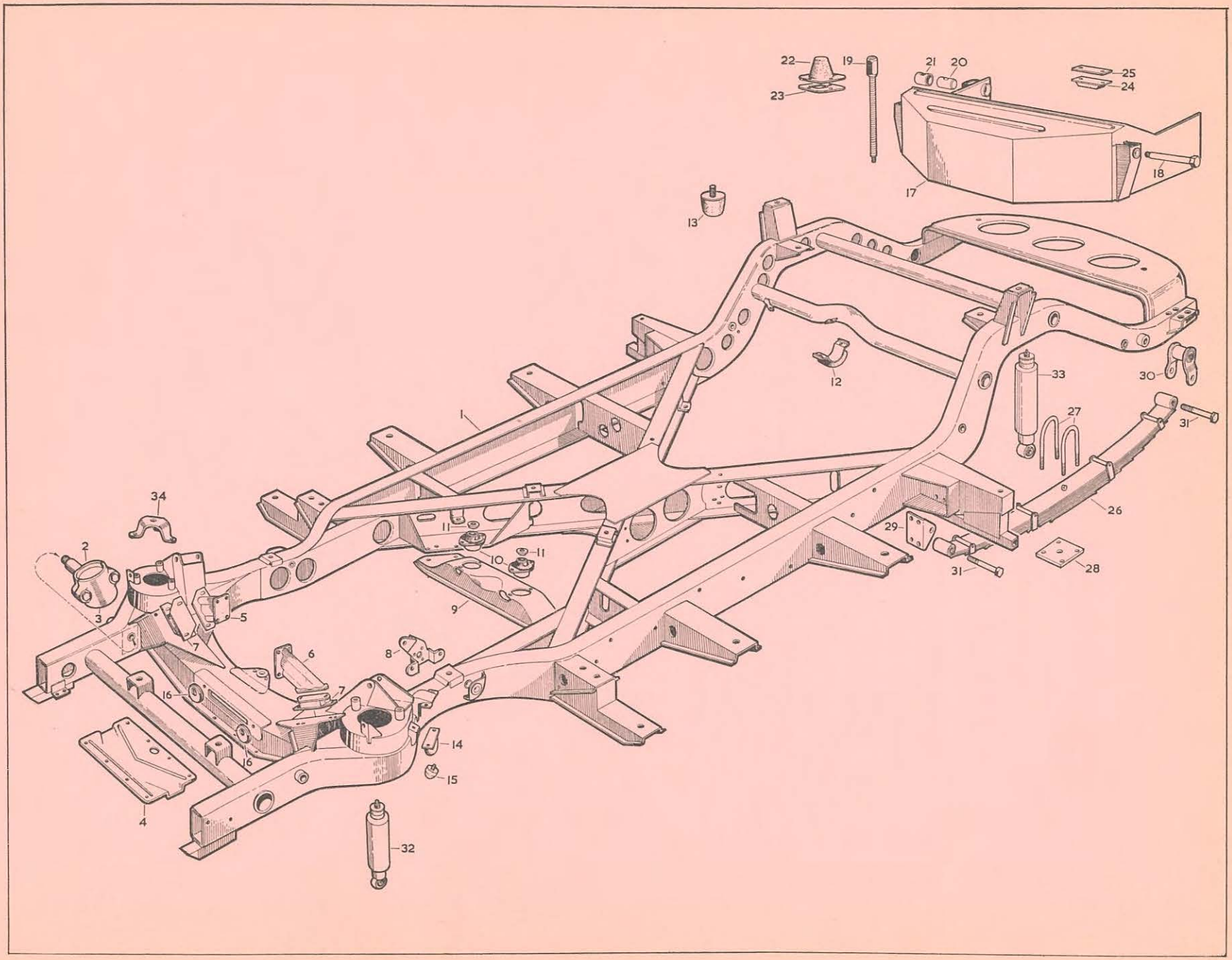
22
19
21
20
25
24
23
18
17
13
12
33
30
27
31
1
26
29
28
31
34
2
11
10
11
9
3
5
7
6
8
7
16
16
14
15
4
32

PLATE 39

BODY SHELL

Part No.	Description	Plate No.	No. per Unit	Remarks
92/631013	**BODY SHELL COMPLETE ASSEMBLY**		1	**R.H. DRIVE ONLY**
93/631013	**BODY SHELL COMPLETE ASSEMBLY**		1	**L.H. DRIVE ONLY**
223/400	**Roof Assembly**		1	
223/302	**Front Door Shell Assembly,** R.H.		1	
223/301	**Front Door Shell Assembly,** L.H.		1	
223/352	**Rear Door Shell Assembly,** R.H.		1	
223/351	**Rear Door Shell Assembly,** L.H.		1	
223/124	**Bulkhead Panel Assembly**		1	
223/804	**Windscreen Panel Assembly**		1	
223/104	**'A' Post Panel Assembly,** R.H.		1	
223/103	**'A' Post Panel Assembly,** L.H.		1	
223/500	**Main Floor Assembly**		1	
223/542	**Sill Assembly,** complete, R.H. Door		1	
223/541	**Sill Assembly,** complete, L.H. Door		1	
223/118	**'BC' Post Assembly,** R.H.		1	
223/117	**'BC' Post Assembly,** L.H.		1	
223/202	**'D' Post,** Upper Assembly, R.H.		1	
223/201	**'D' Post,** Upper Assembly, L.H.		1	
223/114	**'D' Post,** Lower Assembly, R.H.		1	
223/113	**'D' Post,** Lower Assembly, L.H.		1	
223/122	**Rear Quarter Assembly,** R.H.		1	
223/121	**Rear Quarter Assembly,** L.H.		1	
223/510	**Luggage Floor Assembly**		1	
223/110	**Wheel Arch Assembly,** R.H.		1	
223/109	**Wheel Arch Assembly,** L.H.		1	
241/586	**Cover Plate**—Front Floor		1	

BODY PANELS

Part No.	Description	Plate No.	No. per Unit	Remarks
92/669014	**FRONT WING ASSEMBLY, R.H.**		1	
92/669013	**FRONT WING ASSEMBLY, L.H.**		1	
92/669012	**FRONT WING VALANCE, R.H.**		1	
92/669011	**FRONT WING VALANCE, L.H.**		1	
12104/06	**Screw,** Set, securing Wing to Valance		14	
13104	**Nut,** on Setscrew		14	
423654	**Washer,** Plain, on Setscrew		14	
426090/04	**Washer,** Spring, under Nut		14	
12104/06	**Screw,** Set, securing Wing to Dash		6	
13104	**Nut,** on Setscrew		6	
423654	**Washer,** Plain, on Setscrew		6	
426090/04	**Washer,** Spring, under Nut		6	
92/659040	**Plate Washer,** (Long) for Front Wing Fixing		2	**FOR DF.318/9 ONLY**
92/659041	**Plate Washer,** (Short) for Front Wing Fixing		4	
12104/06	**Screw,** Set, securing Wing to Body		6	
13104	**Nut,** on Setscrew		6	
423654	**Washer,** Plain, on Setscrew		12	
426090/04	**Washer,** Spring, under Nut		12	
92/659209	**RUBBER SEAL FOR VALANCE (50" LONG)**		2	
63/669064	**MUDSHIELD ASSEMBLY, R.H.**		1	
63/669063	**MUDSHIELD ASSEMBLY, L.H.**		1	
63/659032	**MUDSHIELD STRUT, R.H.**		1	

Part No.	Description	Plate No.	No. per Unit	Remarks
63/659031	**MUDSHIELD STRUT, L.H.**		1	
12105/05	**Screw,** Set, securing Strut to Chassis Frame		2	
13014	**Nut,** on Setscrew		2	
422500/01	**Washer,** Plain, on Setscrew		2	
426090/04	**Washer,** Spring, under Nut		2	
12104/06	**Screw,** Set, securing Mudshield to Valance		12	
13104	**Nut,** on Setscrew		12	
423654	**Washer,** Plain, on Setscrew		24	
426090/04	**Washer,** Spring, under Nut		12	
12104/04	**Screw,** Set, securing Mudshield to Wing		6	
13104	**Nut,** on Setscrew		6	
423654	**Washer,** Plain, on Setscrews		6	
426090/04	**Washer,** Spring, under Nut		6	
92/669078	**MAKE-UP PIECE BETWEEN WING AND RADIATOR, R.H.**		1	
92/669077	**MAKE-UP PIECE BETWEEN WING AND RADIATOR, L.H.**		1	
12104/06	**Screw,** Set, securing Make-up-Piece to Wing and Valance		6	
423654	**Washer,** Plain, on Setscrews		6	
12104/06	**Screw,** Set, securing Make-up-Piece to Wing and Valance and Radiator Support Bracket		2	
13104	**Nut,** on Setscrew		2	
423654	**Washer,** Plain, on Setscrew		2	
426090/04	**Washer,** Spring, under Nut		2	
12104/04	**Screw,** Set, securing Make-up-Piece to Radiator		2	
422500/01	**Washer,** Plain, on Setscrew		2	
63/669178	**FRONT WING SUPPORT, R.H.**		1	
63/669177	**FRONT WING SUPPORT, L.H.**		1	
92/659133	**BRACKET, REINFORCING FRONT WING ATTACHMENT**		2	
92/645393	**PLATE SEALING FRONT WING, R.H.**		1	

BODY PANELS

Part No.	Description	Plate No.	No. per Unit	Remarks
92/645394	**PLATE SEALING FRONT WING, L.H.**		1	
12104/04	**Screw,** Set, securing Plate Seal to Wing		4	
422500/01	**Washer,** Plain, on Setscrew		4	
92/669153	**COWL ASSEMBLY FOR SIDE LAMP**		2	
426933/33	**Screw,** securing Cowl to Wing		4	
430241/03	**Washer,** Spring, on Screw		4	
431597	**Washer,** Plain, Seating Cowl to Wing		2	
92/659030	**FRONT APRON PANEL**		1	
12104/06	**Screw, Set,** securing Apron		12	
13104	**Nut,** on Setscrew		12	
423654	**Washer,** Plain, on Setscrew		24	
426090/04	**Washer,** Spring, under Nut		12	
92/669001	**BONNET ASSEMBLY**		1	
	(COMPLETE WITH STRIKER AND SAFETY CATCH FOR LOCK)			
223/400	**ROOF ASSEMBLY**		1	
223/302	**FRONT DOOR SHELL ASSEMBLY, R.H.**		1	
223/304	**Outer Panel Assembly**		1	
223/301	**FRONT DOOR SHELL ASSEMBLY, L.H.**		1	
223/303	**Outer Panel Assembly**		1	
223/352	**REAR DOOR SHELL ASSEMBLY, R.H.**		1	
223/354	**Outer Panel Assembly**		1	

Part No.	Description	Plate No.	No. per Unit	Remarks
223/351	REAR DOOR SHELL ASSEMBLY, L.H.		1	
223/353	Outer Panel Assembly		1	
223/804	WINDSCREEN PANEL ASSEMBLY		1	
223/104	'A' POST PANEL ASSEMBLY, R.H.		1	
223/103	'A' POST PANEL ASSEMBLY, L.H.		1	
223/500	MAIN FLOOR ASSEMBLY		1	
223/542	SILL ASSEMBLY COMPLETE, R.H. DOOR		1	
223/541	SILL ASSEMBLY COMPLETE, L.H. DOOR		1	
223/118	'B.C' POST ASSEMBLY, R.H.		1	
223/117	'B.C.' POST ASSEMBLY, L.H.		1	
223/202	'D' POST UPPER ASSEMBLY, R.H.		1	
223/201	'D' POST UPPER ASSEMBLY, L.H.		1	
223/114	'D' POST LOWER ASSEMBLY, R.H.		1	

BODY PANELS

Part No.	Description	Plate No.	No. per Unit	Remarks
223/113	**'D' POST LOWER ASSEMBLY, L.H.**		1	
223/122	**REAR QUARTER ASSEMBLY, R.H.**		1	
223/121	**REAR QUARTER ASSEMBLY, L.H.**		1	
223/510	**LUGGAGE FLOOR ASSEMBLY**		1	
223/110	**WHEEL ARCH ASSEMBLY, R.H.**		1	
223/109	**WHEEL ARCH ASSEMBLY, L.H.**		1	
63/632278	**REAR APRON PANEL**		1	
423187/08	**Screw,** securing Apron (No. 6 P.K.)		12	
12104/04	**Screw,** Set, securing Apron ($\frac{1}{4}$" U.N.F.)		4	
422500/01	**Washer,** Plain, on Setscrew		4	
422508/15	**Washer,** Shakeproof, on Setscrew		4	
223/308	**TRUNK LID ASSEMBLY**		1	

Part No.	Description	Plate No.	No. per Unit	Remarks
134811	**FRONT BUMPER ASSEMBLY** (0'3290)		1	
134810	**Bumper Bar Assembly** (0'3285)		1	
308688	**Spring** (Leaf), Supporting Bumper (0'4828)		2	
1447	**Over-Rider** (0'2249)		2	
209	**Over-Rider Moulding** (RS.66/1)		4	
133396/02	**Nut,** securing Bumper Bar, and Over-Rider to Spring (RS.11/12)		4	
133696/03	**Washer,** Plain, under Nut (RS.14/101)		4	
134647/01	**Washer,** Spring, under Nut (RS.12/46)		4	
303923	**BRACKET SECURING FRONT BUMPER TO FRAME (R.H.)**		1	
303924	**BRACKET SECURING FRONT BUMPER TO FRAME (L.H.)**		1	
431164	**Packing Piece**		As req'd	
11106/08	**Bolt,** securing Bracket to Frame		4	
422514/07	**Nut,** Nyloc, on Bolt		4	
11106/09	**Bolt,** securing Bumper to Bracket		4	
422514/07	**Nut,** Nyloc, on Bolt		4	
422500/03	**Washer,** Plain, under Nut		4	
305756	**BRACKET FOR FOG AND PASS LAMP**		2	
11105/06	**Bolt,** securing Bracket to Bumper Spring		4	
13105	**Nut,** on Bolt		4	
430241/05	**Washer,** Spring, under Nut		4	
304842	**PLATE SUPPORTING FRONT NUMBER PLATE**		1	
326315	**Packing Piece**		3	
12304/09	**Screw,** Set, C/sk. securing Support Plate		3	
13104	**Nut,** on Setscrew		3	
423654	**Washer,** Plain, under Nut		3	
430241/04	**Washer,** Spring, under Nut		3	
134717	**REAR BUMPER ASSEMBLY** (0'3291)		1	
134716	**Bumper Bar Assembly** (0'3286)		1	
305107	**Spring** (Leaf), Supporting Bumper (0'3288)		2	
133396/02	**Nut,** securing Bumper Bar to Spring (RS.11/12)		4	
133396/03	**Washer,** Plain, under Nut (RS.14/101)		4	
134647/01	**Washer,** Spring, under Nut (RS.12/46)		4	
1447	**Over-Rider** (0'2249)		2	
209	**Over-Rider Moulding** (RS.66/1)		4	
133396/02	**Nut,** securing Over-Rider to Bumper Bar (RS.11/12)		4	
134787/02	**Washer,** Plain, under Nut (RS.14/77)		4	
134647/01	**Washer,** Spring, under Nut (RS.12/46)		4	

BODY FITTINGS

Part No.	Description	Plate No.	No. per Unit	Remarks
305655	**MEDALLION FOR REAR BUMPER**		1	
13104	**Nut,** securing Medallion to Rear Bumper		2	
423654	**Washer,** Plain, under Nut		2	
430241/04	**Washer,** Spring, under Nut		2	
134549	**BRACKET SECURING REAR BUMPER TO FRAME**		2	
11106/09	**Bolt,** securing Bumper to Bracket		4	
11106/08	**Bolt,** securing Bracket to Frame		4	
422514/07	**Nut,** Nyloc, on Bolts		8	
422500/03	**Washer,** Plain, under Nut		4	
26202	**RADIATOR SURROUND AND GRILLE ASSEMBLY**		1	
26199	**Radiator Surround Assembly**		1	
26203	**R.H. Grille Assembly**		1	
26204	**L.H. Grille Assembly**		1	
307617	**Motif,** on Radiator Surround		1	
26199	**RADIATOR SURROUND ASSEMBLY**		1	
430779	**Fixing Bracket,** R.H. Side for Grille		1	
430780	**Fixing Bracket,** L.H. Side for Grille		1	
430769	**Cover,** over Starting Handle Hole		1	
423197/2	**Screw,** securing Fixing Bracket to Surround		4	
422543/02	**Nut,** on Screw		4	
423199/2	**Washer,** Plain, on Screw		4	
430241/03	**Washer,** Spring, under Nut		4	
9389	**BONNET TAPE $\frac{1}{4}'' \times \frac{1}{2}'' \times 45''$**		1	
50002/23	**Rivet,** securing Bonnet Tape to Shell		4	
423199/5	**Washer,** on Rivet		4	
92/659209	**RUBBER SEAL FOR VALANCE**		2	
423192/20	**Rivet,** securing Rubber Seal		8	
423199/5	**Washer,** on Rivet		8	

Part No.	Description	Plate No.	No. per Unit	Remarks
92/669070	**CONTROL CABLE ASSEMBLY FOR BONNET LOCK**		1	
431621	**Handle,** on Control Cable		1	
431622	**Grubscrew,** securing Handle to Control Cable		1	
63/635392	**RUBBER SEAL FOR FRONT WING**		2	
92/669205	**BONNET HINGE ASSEMBLY**		2	
11104/06	**Bolt,** securing Hinge to Bonnet		8	
422500/01	**Washer,** Plain, on Bolt		8	
430241/04	**Washer,** Spring, on Bolt		8	
11105/06	**Bolt,** securing Hinge to Bulkhead		8	
422500/02	**Washer,** Plain, on Bolt		8	
430241/05	**Washer,** Spring, on Bolt		8	
92/669204	**BONNET LOCK STRIKER ASSEMBLY**		1	
11104/05	**Bolt,** securing Lock to Bonnet		4	
422500/01	**Washer,** Plain, on Bolt		4	
430241/04	**Washer,** Spring, on Bolt		4	
92/669200	**STRIKER SUPPORT PLATE ASSEMBLY FOR BONNET LOCK**		1	
92/659202	**STRIKER PLATE FOR BONNET LOCK (INNER SLIDER)**		1	
92/669201	**STRIKER PLATE (INNER)**		1	
11104/08	**Bolt,** securing Striker Plate (Inner)		2	
430241/04	**Washer,** Spring, on Bolt		2	
92/659203	**Spring,** returning Striker Plate		1	
304742	**SAFETY CATCH FOR BONNET**		1	
11104/04	**Bolt,** securing Safety Catch to Bonnet		2	
13104	**Nut,** on Bolt		2	
422500/01	**Washer,** Plain, on Bolt		2	
430241/04	**Washer,** Spring, under Nut		2	

BODY FITTINGS

Part No.	Description	Plate No.	No. per Unit	Remarks
C.4691	**INDICATOR IN SIDELAMP CASING**		2	
C.4098/2	**Clip,** securing Indicator to Casing		2	
431597	**SEALING WASHER FOR SIDELAMP**		2	
92/641105	**GRILLE FOR PLENUM CHAMBER**		1	
221/060	**Clip,** securing Grille (Large)		2	
221/061	**Clip,** securing Grille (Small)		6	
425285/02	**Screw,** Fixing Grille to Bulkhead		4	
92/641106	**LATTICE FOR PLENUM CHAMBER**		1	
92/635103	**PLENUM CHAMBER TUBE**		1	
423176/14	**Clip,** for Plenum Tube		1	
92/631098	**Anti-Rattle Sleeve**		1	
92/669190	**CHROME BONNET MOTIF ASSEMBLY**		1	
422543/2	**Nut,** securing Motif to Bonnet		4	
422508/11	**Washer,** Shakeproof, under Nut		4	
92/659208	**CHROME BONNET MOULDING, R.H.**		1	
92/659207	**CHROME BONNET MOULDING, L.H.**		1	
94/637175	**Clip,** securing Mouldings		22	
425269/04	**Rivets,** Pop, securing Clips		22	
92/655126	**CHROME SCUTTLE MOULDING, R.H.**		1	
92/655125	**CHROME SCUTTLE MOULDING, L.H.**		1	
94/637175	**Clip,** securing Mouldings		4	
425269/04	**Rivets,** Pop, securing Clips		4	

Part No.	Description	Plate No.	No. per Unit	Remarks
92/659210	**RUBBER SEAL FOR BONNET (BULKHEAD)**		1	
425269/05	**Rivets,** securing Bonnet Seal		8	
423199/6	**Washer,** on Rivet		8	
92/659145	**RUBBER BUFFER FOR BONNET**		2	
92/625028	**BATTERY CRADLE ASSEMBLY**		1	**R.H. DRIVE CARS ONLY**
11104/04	**Bolt,** securing Battery Cradle to Wing Valance		6	
13104	**Nut,** on Bolt		6	
422500/01	**Washer,** Plain, on Bolt		6	
430241/04	**Washer,** Spring, under Nut		6	
308696	**ANGLE STRAP, SECURING BATTERY**		1	
92/635030	**Tie Rod,** fixing Angle Strap		2	
13204	**Locknut,** securing Tie Rod to Battery Cradle		2	
88602	**Wing Nut,** on Tie Rod		2	
92/659212	**Packing,** between Battery and Valance		1	
423195/38	**Screw,** securing Packing to Valance		2	
422543/2	**Nut,** on Screw		2	
423199/2	**Washer,** Plain, on Screw		2	
50000/06	**Washer,** Spring, under Nut		2	
92/635153	**Packing Piece,** Rubber ($\frac{1}{8}$" × $1\frac{1}{2}$" × 16")		1	
92/635154	**Packing Piece,** Rubber ($\frac{1}{8}$" × 1" × 2")		2	
92/635100	**WINDSCREEN GLASS (TOUGHENED)**		1	
92/675130	**WINDSCREEN GLASS (LAMINATED)**		1	
92/635378	**RUBBER SEAL FOR WINDSCREEN GLASS**		1	
92/635379	**RUBBER FILLER STRIP**		1	

BODY FITTINGS

Part No.	Description	Plate No.	No. per Unit	Remarks
92/631484	CHROME FRAME FINISHER, R.H. FOR WINDSCREEN		1	
92/631483	CHROME FRAME FINISHER, L.H. FOR WINDSCREEN		1	
92/637178	JOINTING PIECE AT CENTRE OF CHROME FINISHERS		2	
92/645415	FACIA PANEL ASSEMBLY		1	DF.316 ONLY
93/645415	FACIA PANEL ASSEMBLY		1	DF.317 ONLY
92/645417	FACIA PANEL ASSEMBLY		1	DF.318 ONLY
93/645417	FACIA PANEL ASSEMBLY		1	DF.319 ONLY
53/645133	LOCK FOR CUBBY BOX LID		1	
92/647215	ASHTRAY ASSEMBLY IN FACIA		1	
92/637219	FRONT PANEL FOR ASHTRAY		1	DF.316/7 ONLY
92/635423	FRONT PANEL FOR ASHTRAY		1	DF.318/9 ONLY

Part No.	Description	Plate No.	No. per Unit	Remarks
92/635180	**STAY SECURING STEERING COLUMN TO DASH, R.H.**		1	**DF.316/7 ONLY**
92/635179	**STAY SECURING STEERING COLUMN TO DASH, L.H.**		1	**DF.316/7 ONLY**
92/635180	**STAY, SECURING STEERING COLUMN TO DASH, L.H. (SHORT)**		1	**DF.318 ONLY**
92/635179	**STAY, SECURING STEERING COLUMN TO DASH, R.H. (SHORT)**		1	**DF.319 ONLY**
92/635310	**STAY, SECURING STEERING COLUMN (LONG)**		1	**DF.318/9 ONLY**
11105/32	**Bolt,** securing Stay to Steering Column		1	
13105	**Nut,** on Bolt		1	
422508/19	**Washer,** Shakeproof, under Nut		1	
11105/07	**Bolt,** securing Stay to Dash		2	
13105	**Nut,** on Bolt		2	
422508/19	**Washer,** Shakeproof, under Nut		2	
305768	**DRAUGHT EXCLUDER ON STEERING COLUMN (RUBBER)**		1	
278726	**FERRULE FOR DRAUGHT EXCLUDER**		1	
431928	**PLATE ASSEMBLY BEHIND DRAUGHT EXCLUDER**		1	
422544/9	**Bolt,** securing Draught Excluder to Dash		6	
423199/2	**Washer,** Plain, on Bolt		6	

BODY FITTINGS

Part No.	Description	Plate No.	No. per Unit	Remarks
92/631790	**FINISHER FOR R.H. 'A' POST**		1	**DF.316/7 ONLY**
92/631789	**FINISHER FOR L.H. 'A' POST**		1	
92/631792	**FINISHER FOR R.H. 'A' POST**		1	**DF.318/9 ONLY**
92/631791	**FINISHER FOR L.H. 'A' POST**		1	
423190/14C	**Screw,** securing Finisher		2	
426087/03C	**Washer,** on Screw		2	
92/632244	**FINISHER FOR R.H. 'BC' POST**		1	
92/632243	**FINISHER FOR L.H. 'BC' POST**		1	
423190/05C	**Screw,** securing Finisher		1	
426087/01C	**Washer,** on Screw		1	
92/632554	**FINISHER FOR R.H. 'D' POST**		1	**DF.316/7 ONLY**
92/632553	**FINISHER FOR L.H. 'D' POST**		1	
92/632944	**FINISHER FOR R.H. 'D' POST**		1	**DF.318/9 ONLY**
92/632943	**FINISHER FOR L.H. 'D' POST**		1	
423190/11C	**Screw,** securing Finisher		2	
92/646470	**CAPPING FOR R.H. FRONT DOOR**		1	**DF.316/7 ONLY**
92/646469	**CAPPING FOR L.H. FRONT DOOR**		1	

Part No.	Description	Plate No.	No. per Unit	Remarks
92/646544	**CAPPING FOR R.H. FRONT DOOR**		1	DF.318/9 ONLY
92/646543	**CAPPING FOR L.H. FRONT DOOR**		1	
92/636571	**Bracket,** fixing Capping to Door		2	
423193/18	**Screw,** for Bracket, $\frac{3}{8}$" C/sk. Head.		6	
423190/14	**Screw,** for Bracket, $1\frac{1}{4}$" Raised Head		4	
426087/03	**Washer,** on Screw		4	
92/646472	**CAPPING FOR R.H. REAR DOOR**		1	DF.316/7 ONLY
92/646471	**CAPPING FOR L.H. REAR DOOR**		1	
92/646548	**CAPPING FOR R.H. REAR DOOR**		1	DF.318/9 ONLY
92/646547	**CAPPING FOR L.H. REAR DOOR**		1	
92/636571	**Bracket,** fixing Capping to Door		2	
423193/18	**Screw,** for Bracket, $\frac{3}{8}$" C/sk. Head		4	
423190/14	**Screw,** for Bracket, $1\frac{1}{4}$" Raised Head		4	
426087/03	**Washer,** on Screw		4	
92/642254	**WAIST CAPPING FOR R.H. REAR QUARTER**		1	DF.316/7 ONLY
92/642253	**WAIST CAPPING FOR L.H. REAR QUARTER**		1	
92/642938	**WAIST CAPPING FOR R.H. REAR QUARTER**		1	DF.318/9 ONLY
92/642937	**WAIST CAPPING FOR L.H. REAR QUARTER**		1	
425281/18C	**Screw,** fixing Capping, $\frac{1}{2}$" Raised Head		2	
423190/11C	**Screw,** fixing Capping, $\frac{3}{4}$" Raised Head		1	

BODY FITTINGS

Part No.	Description	Plate No.	No. per Unit	Remarks
92/632892	**TOP CAPPING FOR R.H. REAR QUARTER LIGHT**		1	**DF.316/7 ONLY**
92/632891	**TOP CAPPING FOR L.H. REAR QUARTER LIGHT**		1	
92/632942	**TOP CAPPING FOR R.H. REAR QUARTER LIGHT**		1	**DF.318/9 ONLY**
92/632941	**TOP CAPPING FOR L.H. REAR QUARTER LIGHT**		1	
423190/14C	**Screw,** fixing Capping		3	
426087/03C	**Washer,** on Screw		3	
92/643419	**R.H. SUN VISOR ASSEMBLY**		1	**FOR R.H. DRIVE CARS ONLY**
92/643420	**L.H. SUN VISOR ASSEMBLY COMPLETE WITH MIRROR**		1	
93/643419	**L.H. SUN VISOR ASSEMBLY**		1	**FOR L.H. DRIVE CARS ONLY**
93/643420	**R.H. SUN VISOR ASSEMBLY COMPLETE WITH MIRROR**		1	
87531/10	**Screw,** securing Visors		6	
63/641799	**INTERIOR DRIVING MIRROR ON HEADER**		1	
87532/10	**Screw,** Set, securing Driving Mirror to Header		2	
426087/05	**Washer,** on Setscrews		2	
92/635247	**ATTACHMENT PLATE ASSEMBLY FOR HANDBRAKE LEVER**		1	**R.H. DRIVE**
93/635247	**ATTACHMENT PLATE ASSEMBLY FOR HANDBRAKE LEVER**		1	**L.H. DRIVE**
92/645246	**ABUTMENT BRACKET FOR HAND-BRAKE CABLE**		1	**R.H. DRIVE**

Part No.	Description	Plate No.	No. per Unit	Remarks
93/645246	**ABUTMENT BRACKET FOR HAND-BRAKE CABLE**		1	**L.H. DRIVE**
12105/06	**Screw,** Set, securing Handbrake Lever to Attachment Plate		2	
13105	**Nut,** on Setscrew		2	
422500/02	**Washer,** Plain, on Setscrew		2	
430241/05	**Washer,** Spring, under Nut		2	
11104/08	**Bolt,** securing Attachment Plate and Abutment Bracket to Dash		4	
422500/01	**Washer,** Plain, on Bolt		4	
430241/04	**Washer,** Spring, on Bolt		4	
12604/06	**Screw,** Set, securing Abutment Bracket to Dash		1	
92/636170	**CHROME MOULDING FOR R.H. FRONT DOOR**		1	
92/636169	**CHROME MOULDING FOR L.H. FRONT DOOR**		1	
94/639175	**Clip,** retaining Moulding to Door		8	
425269/04	**Rivets,** Pop, securing Clips		8	
92/636171	**CHROME MOULDING FOR REAR DOORS**		2	
94/639175	**Clip,** retaining Moulding to Door		7	
425269/04	**Rivets,** Pop, securing Clips		7	
92/632294	**CHROME MOULDING FOR REAR QUARTERS**		2	
94/639175	**Clip,** retaining Moulding		4	
425269/04	**Rivets,** Pop, securing Clips		4	
BD.24033	**R.H. FRONT DOOR, FULLY TRIMMED (COMPLETE WITH ALL FITTINGS)**		1	
BD.24032	**L.H. FRONT DOOR, FULLY TRIMMED (COMPLETE WITH ALL FITTINGS)**		1	

BODY FITTINGS

Part No.	Description	Plate No.	No. per Unit	Remarks
BD.24035	**R.H. FRONT DOOR ASSEMBLY—LESS LOCK AND REMOTE CONTROL**		1	
BD.24034	**L.H. FRONT DOOR ASSEMBLY—LESS LOCK AND REMOTE CONTROL**		1	
92/626062	**LOCK AND REMOTE CONTROL ASSEMBLY FOR R.H. FRONT DOOR**		1	
92/626061	**LOCK AND REMOTE CONTROL ASSEMBLY FOR L.H. FRONT DOOR**		1	
423195/33	**Screw,** securing Lock and Remote Control to Door		14	
430241/03	**Washer,** Spring, on Screw		14	
92/646416	**R.H. FRONT DOOR LIGHT FRAME COMPLETE WITH N.D. VENTILATOR**		1	
225/312	**Rubber Seal,** for Glass Frame		1	
225/309	**Felt,** for Glass—Short		1	
225/310	**Felt,** for Glass—Long		1	
225/308	**Rubber Seal,** for Vent Light		1	
225/304	**Vent Frame and Glass Assembly**		1	
225/330	**Hinge Assembly,** for Vent Light		1	
225/304	**VENT FRAME AND GLASS ASSEMBLY FOR R.H. FRONT DOOR**		1	
225/306	**Glass,** for Vent Frame		1	
225/311	**Glazing Strip,** for Vent Light		1	
225/336	**Catch Handle,** for Vent Light		1	
92/646415	**L.H. FRONT DOOR LIGHT FRAME COMPLETE WITH N.D. VENTILATOR**		1	
225/312	**Rubber Seal,** for Glass Frame		1	
225/309	**Felt,** for Glass—Short		1	
225/310	**Felt,** for Glass—Long		1	
225/307	**Rubber Seal,** for Vent Light		1	
225/303	**Vent Frame and Glass Assembly**		1	
225/329	**Hinge Assembly,** for Vent Light		1	

Part No.	Description	Plate No.	No. per Unit	Remarks
225/303	**VENT FRAME AND GLASS ASSEMBLY FOR L.H. FRONT DOOR**		1	
225/305	**Glass,** for Vent Frame		1	
225/311	**Glazing Strip,** for Vent Light		1	
225/335	**Catch Handle,** for Vent Light		1	
92/636200	**GLASS FOR R.H. FRONT DOOR GLASS FRAME**		1	
92/636199	**GLASS FOR L.H. FRONT DOOR GLASS FRAME**		1	
92/631090	**CHANNEL AT BOTTOM OF R.H. FRONT DOOR GLASS**		1	
92/631089	**CHANNEL AT BOTTOM OF L.H. FRONT DOOR GLASS**		1	
51/636111	**RUBBER SEAL IN GLASS CHANNEL**		1	
51/621052	**STRIKER FOR R.H. FRONT DOOR LOCK**		1	
51/621051	**STRIKER FOR L.H. FRONT DOOR LOCK**		1	
87513/05	**Screw,** securing Striker		4	
63/646566	**OUTSIDE HANDLE (LOCKING) FOR FRONT DOOR**		2	
63/697410	**Locking Barrel,** for Outside Handle		2	
63/636569	**End Clip,** for Handle		2	
63/637233	**Seating Washer,** for Door Handle		2	
63/637234	**Seating Washer,** for End Clip		2	

BODY FITTINGS

Part No.	Description	Plate No.	No. per Unit	Remarks
51/636243	**INSIDE HANDLE FOR FRONT DOOR**		2	
51/636245	**Escutcheon,** for Inside Front Door Handles		2	
51/636244	**Locking Pin,** for Handle		2	
86327	**PULL HANDLE FOR FRONT DOOR**		2	
87532/06	**Screw,** securing Pull Handles		4	
223/316	**ARMREST ASSEMBLY ON R.H. FRONT DOOR**		1	
223/315	**ARMREST ASSEMBLY ON L.H. FRONT DOOR**		1	
422545/15	**Screw,** securing Armrest to Door		3	
63/631088	**WINDOW REGULATOR ASSEMBLY FOR R.H. FRONT DOOR**		1	
63/631087	**WINDOW REGULATOR ASSEMBLY FOR L.H. FRONT DOOR**		1	
12104/04	**Screw,** Set, securing Window Regulators to Door		8	
422500/01	**Washer,** Plain, on Setscrew		8	
430241/04	**Washer,** Spring, on Setscrew		8	
51/636242	**HANDLE FOR WINDOW REGULATOR**		2	
51/636245	**Escutcheon,** for Regulator Handles		2	
51/636244	**Locking Pin,** for Handle		2	
53/626062	**HINGE ASSEMBLY FOR R.H. FRONT DOOR**		2	

BODY FITTINGS

Part No.	Description	Plate No.	No. per Unit	Remarks
53/636061	**HINGE ASSEMBLY FOR L.H. FRONT DOOR**		2	
12305/06	**Screw,** Set, securing Hinges to Body		16	
BD.17034/3	**Screw,** Set, securing Hinges to Door		16	
222/350	**CHECK ARM ASSEMBLY FOR FRONT DOORS**		2	
63/611492	**SWIVEL BRACKET FOR R.H. CHECK ARM**		1	
63/611491	**SWIVEL BRACKET FOR L.H. CHECK ARM**		1	
53/617043	**Screw,** fixing Check Arm to Swivel Bracket		2	
423197/13	**Screw,** securing Swivel Bracket to Tapped Plate		8	
92/636758	**CHROME FINISHER, TOP, REAR OF R.H. FRONT DOOR**		1	
92/636757	**CHROME FINISHER, TOP, REAR OF L.H. FRONT DOOR**		1	
51/636289	**SEALING RUBBER FOR FRONT DOOR HINGE RECESS**		8	
92/636799	**SEALING RUBBER FOR FRONT DOOR SHUT FACE (30″ LONG)**		2	
92/636648	**SEALING RUBBER FOR FRONT DOOR SHUT FACE (31″ LONG)**		2	

BODY FITTINGS

Part No.	Description	Plate No.	No. per Unit	Remarks
63/636649	SEALING RUBBER FOR FRONT DOOR (BOTTOM OUTER) (38″ LONG)		2	
63/636637	SEALING RUBBER FOR FRONT DOOR WAIST (FENCE PLATE SEALING) (30″ LONG)		2	
63/636208	DRAUGHT STRIP FOR FRONT DOOR WAIST CAPPING (INSIDE)		2	
51/637051	BUFFER FOR FRONT DOOR WAIST FENCE PLATE		4	
92/637025	BUFFER FOR COURTESY LIGHT SWITCH IN DOORS		2	
92/636632	FENCE PLATE FOR R.H. FRONT DOOR		1	
92/636631	FENCE PLATE FOR L.H. FRONT DOOR		1	
92/632600	DRAUGHT EXCLUDER FOR FRONT DOOR OPENING (10 FT. LONG)		2	
63/634692	TREAD PLATE FOR R.H. FRONT DOOR		1	
63/634694	TREAD PLATE EXTENSION R.H. FOR FRONT DOOR		1	

Part No.	Description	Plate No.	No. per Unit	Remarks
92/634691	**TREAD PLATE FOR L.H. FRONT DOOR**		1	
92/634693	**TREAD PLATE EXTENSION FOR L.H. FRONT DOOR**		1	
BD.24045	**R.H. REAR DOOR—FULLY TRIMMED (COMPLETE WITH ALL FITTINGS)**		1	
BD.24044	**L.H. REAR DOOR, FULLY TRIMMED (COMPLETE WITH ALL FITTINGS)**		1	
BD.24047	**R.H. REAR DOOR ASSEMBLY—LESS LOCK AND REMOTE CONTROL**		1	
BD.24046	**L.H. REAR DOOR ASSEMBLY—LESS LOCK AND REMOTE CONTROL**		1	
63/626080	**LOCK AND REMOTE CONTROL ASSEMBLY FOR R.H. REAR DOOR**		1	
63/626079	**LOCK AND REMOTE CONTROL ASSEMBLY FOR L.H. REAR DOOR**		1	
423195/33	**Screw,** securing Lock and Remote Control to Door		14	
422508/10	**Washer,** Shakeproof, on Screw		14	
92/636418	**R.H. REAR DOOR LIGHT FRAME ASSEMBLY**		1	
92/636417	**L.H. REAR DOOR LIGHT FRAME ASSEMBLY**		1	
225/316	**Rubber Seal,** for Glass Frame		2	
225/317	**Felt,** for Glass—Short		2	
225/318	**Felt,** for Glass—Long		2	

BODY FITTINGS

Part No.	Description	Plate No.	No. per Unit	Remarks
92/636202	**GLASS FOR R.H. REAR DOORLIGHT FRAME**		1	
92/636201	**GLASS FOR L.H. REAR DOORLIGHT FRAME**		1	
92/631094	**CHANNEL AT BOTTOM OF R.H. REAR DOOR GLASS**		1	
92/631093	**CHANNEL AT BOTTOM OF L.H. REAR DOOR GLASS**		1	
51/636112	**RUBBER SEAL IN GLASS CHANNEL**		2	
51/621052	**STRIKER FOR R.H. REAR DOOR LOCK**		1	
51/621051	**STRIKER FOR L.H. REAR DOOR LOCK**		1	
87513/05	**Screw,** securing Striker		4	
63/646568	**OUTSIDE HANDLE FOR REAR DOORS**		2	
63/636569	**End Clip,** for Handle		2	
63/637233	**Seating Washer,** for Door Handle		2	
63/637234	**Seating Washer,** for End Clip		2	
51/636243	**INSIDE DOOR HANDLE FOR REAR DOOR LOCKS**		2	
51/636245	**Escutcheon,** for Inside Rear Door Handles		2	
51/636244	**Locking Pin,** for Handle		2	

Part No.	Description	Plate No.	No. per Unit	Remarks
86327	**PULL HANDLE FOR REAR DOORS**		2	
87532/06	**Screw,** securing Door Pull to Door		4	
63/631092	**WINDOW REGULATOR ASSEMBLY FOR R.H. REAR DOOR**		1	
63/631091	**WINDOW REGULATOR ASSEMBLY FOR L.H. REAR DOOR**		1	
12104/04	**Screw,** Set, securing Window Regulator to Door		12	
422500/01	**Washer,** Plain, on Setscrews		12	
430241/04	**Washer,** Spring, on Setscrews		12	
51/636242	**HANDLE FOR WINDOW REGULATOR**		2	
51/636245	**Escutcheon,** for Regulator Handles		2	
51/636244	**Locking Pin,** for Handle		2	
92/626064	**HINGE ASSEMBLY (UPPER) FOR R.H. REAR DOOR**		1	
53/626066	**HINGE ASSEMBLY (LOWER) FOR R.H. REAR DOOR**		1	
92/626063	**HINGE ASSEMBLY (UPPER) FOR L.H. REAR DOOR**		1	
53/626065	**HINGE ASSEMBLY (LOWER) FOR L.H. REAR DOOR**		1	
12305/06	**Screw,** Set, securing Hinges to Body		16	
BD.17034/3	**Screw,** Set, securing Hinges to Door		16	

BODY FITTINGS

Part No.	Description	Plate No.	No. per Unit	Remarks
222/350	**CHECK ARM ASSEMBLY FOR REAR DOORS**		2	
63/611492	**SWIVEL BRACKET FOR R.H. CHECK ARM**		1	
63/611491	**SWIVEL BRACKET FOR L.H. CHECK ARM**		1	
53/617043	**Screw,** fixing Check Arm to Swivel Bracket		2	
423197/13	**Screw,** securing Swivel Bracket to Tapped Plate		8	
92/636669	**TRIM PAD, INTERIOR REAR DOOR**		2	
423190/03	**Screw,** securing Trim Pad to Door—Short		1	
423190/05	**Screw,** securing Trim Pad to Door—Long		11	
426088/01	**Washer,** on Screws		12	
92/636760	**CHROME FINISHER, TOP REAR OF R.H. REAR DOOR**		1	
92/636759	**CHROME FINISHER, TOP REAR OF L.H. REAR DOOR**		1	
51/636289	**SEALING RUBBER FOR REAR DOOR HINGE RECESS**		8	
92/636801	**SEALING RUBBER FOR REAR DOOR SHUT FACE (32″ LONG)**		2	

Part No.	Description	Plate No.	No. per Unit	Remarks
92/636648	SEALING RUBBER FOR REAR DOOR HINGE FACE (30″ LONG)		2	
63/636650	SEALING RUBBER FOR REAR DOOR (BOTTOM OUTER) (28″ LONG)		2	
63/636638	SEALING RUBBER FOR REAR DOOR WAIST (FENCE SEALING PLATE) (26¼″ LONG)		2	
63/636213	DRAUGHT STRIP FOR REAR DOOR WAIST CAPPING (INSIDE)		2	
51/637051	BUFFER FOR REAR DOOR WAIST FENCE PLATE		2	
92/637262	BUFFER FOR COURTESY LIGHT SWITCH IN DOOORS		2	
92/663634	FENCE PLATE FOR R.H. REAR DOOR		1	
92/663633	FENCE PLATE FOR L.H. REAR DOOR		1	
92/632601	DRAUGHT EXCLUDER FOR REAR DOORS (9′ 6″ LONG)		2	

BODY FITTINGS

Part No.	Description	Plate No.	No. per Unit	Remarks
63/634696	**TREAD PLATE FOR R.H. REAR DOOR**		1	
63/634695	**TREAD PLATE FOR L.H. REAR DOOR**		1	
425269/05	**Rivets,** Pop, securing Tread Plates		46	
63/633066	**NO. 1 LISTING STICK FOR ROOF**		1	
63/633067	**NO. 2 LISTING STICK FOR ROOF**		1	
63/633068	**NO. 3 LISTING STICK FOR ROOF**		1	
63/633069	**NO. 4 LISTING STICK FOR ROOF**		1	
92/633441	**SPRING WIRE REINFORCING LISTING STICK**		1	
4231 87/08	**Screw,** securing Listing Sticks to Body		16	
92/633020	**CENTRE ROOF BOW**		1	
12704/04	**Screw,** Set, securing Centre Roof Bow to Body		4	
422500/01	**Washer,** Plain, on Setscrews		4	
92/633169	**TACKING STRIP FOR CENTRE ROOF BOW**		2	
92/641354	**FRONT BENCH SEAT, COMPLETE ASSEMBLY**		1	

Part No.	Description	Plate No.	No. per Unit	Remarks
223/132	**ARMREST ASSEMBLY FOR FRONT SEAT**		1	
69/647252	**ASHTRAY, BACK OF FRONT SEAT**		2	
222/130	**SEAT RUNNER ASSEMBLY, COMPLETE WITH CATCH**		1	
11105/06	**Bolt,** securing Seat Runners		4	
13105	**Nut,** on Bolts		4	
430241/05	**Washer,** Spring, under Nuts		4	
11105/06	**Bolt,** securing Seat Runner to Floor		4	
430241/05	**Washer,** Spring, on Bolts		4	
92/641315	**REAR SEAT CUSHION ASSEMBLY**		1	
92/641314	**REAR SEAT SQUAB ASSEMBLY**		1	
223/162	**ARMREST ASSEMBLY FOR REAR SEAT**		1	
63/641488	**LOOP PULL AT R.H. REAR QUARTER**		1	
63/641487	**LOOP PULL AT L.H. REAR QUARTER**		1	
92/635112	**R.H. SIDE CASINGS FOR DASH**		1	
92/635111	**L.H. SIDE CASINGS FOR DASH**		1	
92/633290	**HEADER TRIM PANEL**		1	
423190/06C	**Screw,** securing Panel		4	

BODY FITTINGS

Part No.	Description	Plate No.	No. per Unit	Remarks
92/633286	**CANTRAIL TRIM FILLETS**		2	
423190/06C	**Screw,** securing Cant Rail		8	
426087/01	**Washer,** on Screws		12	
92/633075	**TACKING STRIP FOR CANTRAIL**		2	
TAP/D/B5440	**Rivet,** Pop, Fixing Tacking Strips		66	
170182	**TRIM PAD ASSEMBLY FOR R.H. REAR QUARTER**		1	
170181	**TRIM PAD ASSEMBLY FOR L.H. REAR QUARTER**		1	
92/642100	**NO DRAUGHT VENTILATOR ASSEMBLY FOR R.H. REAR QUARTER**		1	
225/332	**Catch,** for R.H. No Draught Ventilator		1	
92/642099	**NO DRAUGHT VENTILATOR ASSEMBLY FOR L.H. REAR QUARTER**		1	
225/331	**Catch,** for L.H. No Draught Ventilator		1	
92/632885	**RUBBER SEAL AT TOP OF REAR QUARTER NO DRAUGHT VENTILATORS**		2	
92/632884	**RUBBER SEAL AT FRONT OF REAR QUARTER NO DRAUGHT VENTILATORS**		2	
92/632883	**RUBBER SEAL AT BOTTOM OF REAR QUARTER NO DRAUGHT VENTILATORS**		2	

Part No.	Description	Plate No.	No. per Unit	Remarks
63/633347	BACKLIGHT GLASS—TOUGHENED		1	
92/633125	BACKLIGHT GLASS—LAMINATED		1	
92/631760	RUBBER SEAL FOR BACKLIGHT (GLAZING)		1	
92/631761	FILLERSTRIP FOR BACKLIGHT		1	
92/631486	R.H. FRAME FINISHER FOR BACK-LIGHT		1	
92/631485	L.H. FRAME FINISHER FOR BACK-LIGHT		1	
92/637178	JOINT COVER FOR FRAME FINISHERS		2	
63/636602	CENTRE MOTIF FOR TRUNK LID		1	
63/636604	R.H. SIDE MOTIF FOR TRUNK LID		1	
63/636603	L.H. SIDE MOTIF FOR TRUNK LID		1	
63/636671	ANGLE ATTACHMENT FOR CENTRE MOTIF		1	
63/636611	SEALING PAD FOR MOTIF		1	
87623-04	**Screw,** Set, securing Motif Sides to Motif Centre		6	
430241/03	**Washer,** Spring, on Setscrews		6	
423195/34	**Screw,** Set, securing Motif to Trunk Lid		10	
422543/2	**Nut,** on Setscrews		4	
430241/03	**Washer,** Spring, on Setscrews		10	
90025/02	**Screw,** securing Motif to Angle Attachment		1	
423187/02	**Screw,** securing Angle Attachment to Trunk Lid		1	

BODY FITTINGS

Part No.	Description	Plate No.	No. per Unit	Remarks
63/641385	**LOCKING BARREL FOR TRUNK LID**		1	
65/641255	**LOCK ASSEMBLY FOR TRUNK LID**		1	
222/236	**Striker Plate,** for Trunk Lock		1	
63/632876	**Packing Piece,** for Striker Plate		As req'd	
87623/03	**Screw,** Set, securing Lock to Trunk Lid and Bracket		2	**Alternatives dependent on number of Packings used**
87623/04	**Screw,** Set, securing Lock to Trunk Lid and Bracket		2	
422543/2	**Nut,** on Setscrews		2	
423199/02	**Washer,** Plain, on Setscrews		4	
430241/03	**Washer,** Spring, on Setscrews		4	
11104/10	**Screw,** Set, securing Trunk Lock Striker Plate to Body		2	
13104	**Nut,** on Setscrews		2	
422500/01	**Washer,** Plain, on Setscrews		2	
430241/04	**Washer,** Spring, under Nut		2	
63/646605	**BRACKET FOR REAR NUMBER PLATE LAMP**		1	
63/626034	**HINGE FOR TRUNK LID**		2	
63/636773	**Packing Piece,** for Trunk Lid Hinge		As req'd	
12105/06	**Screw,** Set, securing Hinge to Lid		8	
422500/02	**Washer,** Plain, on Setscrew		8	
422508/22	**Washer,** Shakeproof, on Setscrew		8	
12104/08	**Screw,** Set, securing Hinge to Body (Long)		4	
12104/04	**Screw,** Set, securing Hinge to Body (Short)		4	
422500/01	**Washer,** Plain, on Setscrew		8	
422508/15	**Washer,** Shakeproof, on Setscrew		8	
422514/05	**Nut,** Nyloc		4	
92/632598	**RUBBER SEAL FOR TRUNK OPENING**		1	
92/659145	**RUBBER BUFFER FOR TRUNK LID**		2	
63/642274	**TOP STRAP ASSEMBLY FOR PETROL TANK**		2	
64/642273	**REAR STRAP ASSEMBLY FOR PETROL TANK**		2	
11105/04	**Bolt,** securing Top Strap to Body		2	
11105/07	**Bolt,** securing Rear Strap to Body		2	
11105/12	**Bolt,** securing Top to Rear Strap		2	
422508/22	**Washer,** Shakeproof, on Bolts		6	

Part No.	Description	Plate No.	No. per Unit	Remarks
75/687438	**SEAL RING FOR PETROL TANK (BOTTOM)**		1	
	CARPETS			
53211	**Carpet,** for Front Floor		1	**R.H. DRIVE**
53212	**Carpet,** for Front Floor		1	**L.H. DRIVE**
92/644686	**Carpet,** for Intermediate Floor		1	
92/644142	**Carpet,** for Rear Floor		1	
170658	**Carpet,** for Rear Sill, L.H.		1	
170659	**Carpet,** for Rear Sill, R.H.		1	
92/644143	**Carpet,** for Rear Seat Heelboard		1	
92/634202	**RUBBER RETAINER HOLDING CARPETS AT FRONT DOOR SILLS**		2	
63/634467	**Fixing Strip,** securing Rubber Carpet Retainer at Front Door Sills		2	
425269/05	**Pop Rivets,** securing Fixing Strips		20	
92/634203	**RUBBER RETAINER HOLDING CARPETS AT REAR DOOR SILLS**		2	
63/634466	**Fixing Strip,** securing Rubber Carpet Retainer at Rear Door Sills		2	
425269/05	**Pop Rivets,** securing Fixing Strips		16	
94/644439	**UNDERFELT ASSEMBLY FOR FRONT FLOOR AND GEARBOX**		1	
92/634405	**UNDERFELT FOR REAR FLOOR**		1	
92/634884	**UNDERFELT, ANTI-DRUM FOR REAR FLOOR**		1	
BD.23686	**GEARBOX COVER TRIM ASSEMBLY**		1	

BODY FITTINGS

Part No.	Description	Plate No.	No. per Unit	Remarks
	BODY INSULATION—RUBBERISED FELT $\frac{1}{4}''$ THICK			
94/632310	**Rubberised Felt,** for R.H. Wheel Arch		1	
93/632309	**Rubberised Felt,** for L.H. Wheel Arch		1	
94/634371	**Rubberised Felt,** for R.H. Boot Floor		1	
94/634370	**Rubberised Felt,** for L.H. Boot Floor		1	
94/634382	**Rubberised Felt,** for R.H. Sill, Front Floor		1	
94/634381	**Rubberised Felt,** for L.H. Sill, Front Floor		1	
94/634385	**Rubberised Felt,** for R.H. Front Floor		1	
94/634384	**Rubberised Felt,** for L.H. Front Floor		1	
	BODY INSULATION—RUBBERISED FELT $\frac{1}{2}''$ THICK			
94/634386	**Rubberised Felt,** for Gearbox Cover		1	
94/634389	**Rubberised Felt,** for R.H. Toeboard		1	**R.H. DRIVE**
94/634388	**Rubberised Felt,** for L.H. Toeboard		1	
95/634389	**Rubberised Felt,** for R.H. Toeboard		1	**L.H. DRIVE**
95/634388	**Rubberised Felt,** for L.H. Toeboard		1	
	BODY INSULATION—FLINTKOTE REF. No. 109B			
94/634318	**Flintkote,** for Centre Front Floor		1	
94/636360	**Flintkote,** for Inner Facing Sill, Front Door		2	
94/636361	**Flintkote,** for Inner Top, Front Door		2	
94/636362	**Flintkote,** for Inner Bottom, Front Door		2	
94/636363	**Flintkote,** for Inner Centre, Front Door		2	
94/636365	**Flintkote,** for Inner Top, Rear Door		2	
94/636367	**Flintkote,** for Inner Facing Sill, Rear Door		2	
94/636368	**Flintkote,** for Inner Bottom, Rear Door		2	
94/634375	**Flintkote,** for Rear Floor		1	
94/634373	**Flintkote,** for Toeboard		2	
94/634315	**Flintkote,** for Front Floor		2	
94/634374	**Flintkote,** for Front Sill		2	
	BODY INSULATION—HARDURA			
94/634378	**Hardura,** for R.H. Toeboard		1	**R.H. DRIVE**
94/634377	**Hardura,** for L.H. Toeboard		1	
95/634378	**Hardura,** for R.H. Toeboard		1	**L.H. DRIVE**
95/634377	**Hardura,** for L.H. Toeboard		1	
94/634379	**Hardura,** for Gearbox Cover		1	

Part No.	Description	Plate No.	No. per Unit	Remarks
	CARPETS—NON-FELTED			
92/636184	**Carpet,** for R.H. Front Door Casing		1	
92/636183	**Carpet,** for L.H. Front Door Casing		1	
92/636182	**Carpet,** for R.H. Rear Door Casing		1	
92/636181	**Carpet,** for L.H. Rear Door Casing		1	
92/635118	**Carpet,** for R.H. Dash Side		1	**R.H. DRIVE**
92/635117	**Carpet,** for L.H. Dash Side		1	
93/635118	**Carpet,** for R.H. Dash Side		1	**L.H. DRIVE**
93/635117	**Carpet,** for L.H. Dash Side		1	
92/634137	**Carpet,** for Heelboard for Rear Seat		1	
92/634752	**Carpet,** for Intermediate Floor		1	
92/634885	**Carpet,** for Back of Front Seat Squab		1	
	SEALING RUBBERS			
92/636799	**Sealing Rubber,** for Front Door Shut Face (30″ long)		2	
92/636648	**Sealing Rubber,** for Front Door Hinge Face (31″ long)		2	
63/636649	**Sealing Rubber,** for Front Door Outer Bottom (38″ long)		2	
63/636637	**Sealing Rubber,** for Front Door Waist (30″ long)		2	
51/636289	**Sealing Rubber,** for Front Door Hinge Recess		2	
51/636111	**Sealing Rubber,** for Front Door Bottom Channel		2	
92/636801	**Sealing Rubber,** for Rear Door Shut Face (32″ long)		2	
92/636648	**Sealing Rubber,** for Rear Door Hinge Face (30″ long)		2	
63/636650	**Sealing Rubber,** for Rear Door, Outer Bottom (28″ long)		2	
63/636638	**Sealing Rubber,** for Rear Door Waist (26¼″ long)		2	
51/636289	**Sealing Rubber,** for Rear Door Hinge Recess		2	
51/636112	**Sealing Rubber,** for Rear Door Bottom Channel		2	
92/635378	**Sealing Rubber,** for Windscreen Glass		2	
92/635379	**Sealing Rubber,** for Windscreen Glass (Filler)		2	
225/312	**Sealing Rubber,** for Front Door Glass Frame		2	
225/308	**Sealing Rubber,** for Front Door Vent Light, R.H.		1	
225/307	**Sealing Rubber,** for Front Door Vent Light, L.H.		1	
225/311	**Sealing Rubber,** for Front Door Vent (Glazing)		2	
225/316	**Sealing Rubber,** for Rear Door Glass Frame		2	
63/632883	**Sealing Rubber,** for Rear Quarter No Draught Ventilator, Bottom		2	
92/632884	**Sealing Rubber,** for Rear Quarter No Draught Ventilator, Front		2	
92/632885	**Sealing Rubber,** for Rear Quarter No Draught Ventilator, Top		2	
225/324	**Sealing Rubber,** for Rear Quarter No Draught Ventilator Frame, R.H.		1	
225/323	**Sealing Rubber,** for Rear Quarter No Draught Ventilator Frame, L.H.		1	
225/327	**Sealing Rubber,** for Rear Quarter No Draught Ventilator (Glazing)		2	
92/631760	**Sealing Rubber,** for Backlight (Glazing)		1	
92/631761	**Sealing Rubber,** for Backlight (Filler)		1	
92/632598	**Sealing Rubber,** for Trunk Opening		1	
63/635392	**Sealing Rubber,** for Front Wing		2	
92/659209	**Sealing Rubber,** for Valance		2	
92/659210	**Sealing Rubber,** for Bonnet		2	

BODY FITTINGS

Part No.	Description	Plate No.	No. per Unit	Remarks
	BODY MOUNTINGS			
11106/12	**Bolt,** Body Mounting Point No. 1 (Inner and Intermediate)		4	
11106/22	**Bolt,** Body Mounting Point No. 1 (Outer)		2	
11106/14	**Bolt,** Body Mounting Point No. 2 (Outer)		2	
12206/10	**Screw,** Set, Body Mounting Point No. 2 (Inner)		2	
11106/18	**Bolt,** Body Mounting Point No. 3 (Outer)		2	
12206/11	**Screw,** Set, Body Mounting Point No. 3 (Centre)		2	
12206/10	**Screw,** Set, Body Mounting Point No. 3 (Inner)		2	
12106/11	**Screw,** Set Body Mounting Points No. 4 & 6		4	
12206/12	**Screw,** Set, Body Mounting Point No. 5		2	Alternatives
12206/16	**Screw,** Set, Body Mounting Point No. 5		2	
12106/10	**Screw,** Set, Dash Panel Mounting Bracket		2	
422500/03	**Washer,** Body Mounting Points		16	
423432	**Nut,** on Bolts		14	
401650	**Pad,** for Mountings (Balata)		As req'd	
423416	**Pad,** for Mountings (Balata)		6	
265809	**Locating Washer**		26	
400994	**Locating Washer (Rubber)**		26	

ELECTRICAL EQUIPMENT

Part No.	Description	Plate No.	No. per Unit	Remarks
133562	**DYNAMO (C.45-PV5-22456B)**	40—1	1	**NOT REQUIRED WITH HYDROSTEER (POWER ASSISTED STEERING)**
2778	**Brushes** (238061)		1 set	
2779	**Spring,** for Brush Tension (238062)		1 set	
6509	**Armature** (239188)		1	
133543/04	**Field Coil** (227291)		1 set	
2786	**Bushing,** Commutator End (238567)		1	
133562/05	**Frame Bracket,** Commutator End (238862)		1	
2757	**Bearing,** Driving End (189308)		1	
2749	**Nut,** on Shaft (180620)		1	
6502	**Cover Band** (227015)		1	
302681	**BRACKET, SUPPORTING DYNAMO (S.302681A)**	40—2	1	
21107/08	**Bolt,** securing Bracket to Cylinder Block		2	
430241/07	**Washer,** Spring, on Bolt		2	
424862	**Bolt,** securing Dynamo to Support Bracket, (Front)		1	
13305	**Nut,** on Bolt		1	
422540/05	**Washer,** D.C. Spring, under Nut		1	
422501/07	**Split Pin,** securing Nut		1	
425259	**Pin,** Mounting Dynamo to Support Bracket (Rear)		1	**NOT REQUIRED WITH HYDROSTEER (POWER ASSISTED STEERING)**
13305	**Nut,** on Pin		1	
422500/02	**Washer,** Plain, under Nut		1	
422501/07	**Split Pin,** securing Nut		1	
C.15254	**DYNAMO (C.45-PVS.6-22528D)**		1	**REQUIRED WITH HYDROSTEER (POWER ASSISTED STEERING)**
432869	**Pin,** Mounting Dynamo to Support Bracket (Rear)		1	**REQUIRED WITH HYDROSTEER (POWER ASSISTED STEERING)**
302699	**ADJUSTING STRIP FOR DYNAMO**	40—3	1	
425236	**Bolt,** securing Dynamo to Adjusting Strip (112640)		1	
401883	**Washer,** Serrated, on Bolt		1	
430241/05	**Washer,** Spring, on Bolt		1	
13305	**Nut,** securing Adjusting Strip to Crankcase		1	
422540/05	**Washer,** D.C. Spring, under Nut		1	
306272	**DYNAMO PULLEY ASSEMBLY**	40—4	1	
304503	**FAN FOR DYNAMO PULLEY**	40—5	1	

ELECTRICAL EQUIPMENT

Part No.	Description	Plate No.	No. per Unit	Remarks
133544	**STARTER MOTOR (M.418G, 25533D)**	40—6	1	
2804	**Brush** (255659)		1 set	
2811	**Spring,** for Brush Tension (270004)		1 set	
2800	**Armature** (255463)		1	
2810	**Field Coil** (256578)		1 set	
2801	**Bushing,** Commutator End (255491)		1	
2812	**Bushing,** Driving End (270038)		1	
6544	**Cover Band** (255557)		1	
6546	**Bracket,** Commutator End (256748)		1	
2806	**Spring,** Retaining Pinion (255728)		1	
2796	**Pinion and Sleeve** (255194)		1	
2818	**Main Spring** (270889)		1	
2808	**Nut,** on Shaft securing Dynamo Pulley and Fan (255851)		1	
11106/18	**Bolt,** securing Starter Motor		2	
422514/07	**Nut,** Nyloc, on Bolt		2	
307316	**SOLENOID FOR STARTER MOTOR (ST.950-76443)**	40—7	1	
422544/10	**Bolt,** securing Solenoid to Dash		2	
422543/2	**Nut,** on Bolt		2	
423199/2	**Washer,** Plain, under Nut		2	
422508/09	**Washer,** Shakeproof, under Nut		2	
308101	**IGNITION COIL (HA.12-45102E)**	40—8	1	
C.5451	**Nut,** securing Ignition Cable in Centre of Coil (408120)		1	
C.5452	**Washer,** Spring, under Nut (185015)		1	
308372	**IGNITION COIL (7952470)**	40—8	1	
426274	**Clip,** securing Ignition Terminal (829833)		1	
426273	**Nipple** (1913635)		1	
12105/04	**Screw,** Set, securing Coil to Cylinder Block		2	
430241/05	**Washer,** Spring, on Setscrew		2	
135969	**DISTRIBUTOR (DM.6-40614A)**	40—9	1	
6478	**Cap** (418857)		1	
6479	**Brush and Spring** (418856)		1	
6060	**Rotor Arm** (418726)		1	
C.11990	**Contact Set** (420197)		1	
8031	**Condenser** (423871)		1	
135969/01	**Springs,** Auto Advance (54410271)		1 set	
134473/02	**Vacuum Unit** (423040)		1	
2943	**Driving Dog** (410601)		1	
413819	**Washer,** for Driving Dog		1	
425084	**Clamp,** securing Distributor		1	
C.11906	**Terminal Nut** (410600)		7	
C.5452	**Washer,** Spring, under Nut (185015)		7	

Part No.	Description	Plate No.	No. per Unit	Remarks
	DISTRIBUTOR (DM.6-40614A) *(continued)*			
430786	**Bracket,** for Distributor (P.430786)	40—10	1	
22105/07	**Screw,** Set, securing Bracket		2	
430241/05	**Washer,** Spring, on Setscrew		2	
22104/06	**Screw,** Set, securing Ignition Lever		1	
422500/01	**Washer,** Plain, on Setscrews		1	
135372	**SUCTION PIPE FROM FRONT CARBURETTER TO DISTRIBUTOR VACUUM CONTROL**	40—11	1	
133007	**PETROL PUMP (UE-1524750)**	40—12	1	
133007/01	**Valve Assembly** (5591860)		2	
133007/02	**Gasket,** for Valve (1524370)		1	
133007/03	**Diaphragm Assembly** (1524628)		1	
133007/04	**Spring,** for Diaphragm (1524013)		1	
133007/10	**Spring,** for Hand Primer (1524463)		1	
133007/05	**Rocker Arm** (1524151)		1	
133007/06	**Spring,** for Rocker Arm (856927)		1	
133007/07	**Pin,** for Rocker Arm (856035)		1	
133007/08	**Circlip,** for Pin (1524112)		2	
133007/09	**Link Assembly** (856961)		1	
7300	**Bowl,** for Filter (Glass) (1523620)		1	
7298	**Gasket** (5593321)		1	
133007/14	**Filter** (854009)		1	
133007/15	**Screw,** securing Top Casting to Body (855493)		6	
133007/16	**Washer,** on Screw (114648)		6	
422787	**Union** (Straight) (1524729)	40—13	2	
425103	**Gasket,** between Petrol Pump and Cylinder Block (1524686)	40—14	1	
21105/08	**Bolt,** securing Petrol Pump to Cylinder Block		2	
430241/05	**Washer,** Spring, on Bolt		2	
C.8821	**CONTROL BOX (37189/J-RB.310)**	40—15	1	
7181	**Cover** (335610)		1	
7182	**Screw,** securing Cover (335544)		2	
7183	**Resistance** (335987)		1	
7184	**Terminal Block** (126490)		3	
7918	**Rubber Gasket** (335563)		1	
C.5543	**FUSE BOX (033239-SF.6)**	40—16	1	
C.5638	**Fuse,** 35 Amp. (188218)		4	
6471	**Terminal Screw** (121610)		4	

ELECTRICAL EQUIPMENT

Part No.	Description	Plate No.	No. per Unit	Remarks
430818	**HEADLAMP ASSEMBLY (51698A-PF.700 MK. 2)**		2	
430818/01	**Outer Rim** (553965)	40—17	2	**R.H. DRIVE ONLY**
5294	**Screw,** securing Outer Rim (552796)		2	
3460	**Rubber Dust Excluder** (553954)	40—18	2	
5292	**Light Unit** (554308)	40—19	2	
3465	**Plate,** Light Unit retaining (553971)	40—20	2	
3581	**Bulb Adaptor** (858543)	40—21	2	
3461	**Rubber Gasket** (Body) (553955)	40—22	2	
135122/03	**Bulb** (No. 414-12V-50/40W)		2	
430826	**HEADLAMP ASSEMBLY (51699A-PF.700 MK. 2)**		2	
430818/01	**Outer Rim** (553965)		2	**L.H. DRIVE EXCEPT U.S.A. AND EUROPE**
5294	**Screw,** securing Outer Rim (552796)		2	
3460	**Rubber Dust Excluder** (552954)		2	
135123/01	**Light Unit** (555296)		2	
3581	**Bulb Adaptor** (858543)		2	
3461	**Rubber Gasket** (Body) (553955)		2	
135123/02	**Bulb** (No. 415-12V-50/40W)		2	
430829	**HEADLAMP ASSEMBLY (51646A-P.700 MK. 2)**		2	
430818/01	**Outer Rim** (553965)		2	**L.H. DRIVE, U.S.A. ONLY**
5294	**Screw,** securing Outer Rim (552796)		2	
3460	**Rubber Dust Excluder** (553954)		2	
3454	**Bulb Adaptor** (553724)		2	
3461	**Rubber Gasket** (Body) (553955)		2	
430827	**HEADLAMP ASSEMBLY (51700A-P.700 MK.2)**		2	
430818/01	**Outer Rim** (553965)		2	**L.H. DRIVE, EXCEPT FRANCE**
5294	**Screw,** securing Outer Rim (552796)		2	
3460	**Rubber Dust Excluder** (553954)		2	
6525	**Light Unit** (553940)		2	
3581	**Bulb Adaptor** (858543)		2	
3461	**Rubber Gasket** (Body) (553955)		2	
C.5510	**Bulb** (No. 370-12V-45/40W)		2	
430828	**HEADLAMP ASSEMBLY (51701A-P700 MK.2)**		2	
430818/01	**Outer Rim** (553965)		2	**L.H. DRIVE, FRANCE ONLY**
5294	**Screw,** securing Outer Rim (552796)		2	
3460	**Rubber Dust Excluder** (553954)		2	
134319/04	**Light Unit** (553949)		2	
3461	**Rubber Gasket** (Body) (553955)		2	
371	**Bulb** (No. 372-12V-45/36W)		2	
423197/13	**Screw**		16	
425156	**Tubing,** for Cable		2	

Part No.	Description	Plate No.	No. per Unit	Remarks
308032	**SIDELAMP COMPLETE (517-52426)**		2	
307794/01	**Rim** (516556)	40—23	2	
307794/02	**Screw,** securing Rim (136231)		4	
307794/03	**Lens** (516386)	40—24	2	
307794/04	**Gasket,** sealing Lens (516395)	40—25	2	
307794/05	**Seating Rubber,** for Lamp (516553)	40—26	2	
3455	**Bulb Holder** (553780)	40—27	1	
4207S7	**Bulb** (No. 989-12V-6W)		1	
422547/14	**Screw,** for Sidelamps		4	
430241/03	**Washer,** Spring, on Screw		4	
307795	**FRONT FLASHER LAMP (AMBER LENS) (L.594-52337A)**		2	
307795/01	**Rubber Seating,** for Body (576105)	40—28	2	**R.H. DRIVE AND LEFT HAND DRIVE EXCEPT U.S.A.**
3485	**Rim** (572734)	40—29	2	
307795/02	**Lens** (Amber) (576108)	40—30	2	
307795/03	**Bulb Holder and Plate Assembly** (576986)	40—31	2	
C.9126	**Bulb** (382-12V-21W)		2	
307796	**FRONT FLASHER LAMP (WHITE LENS) (L.594-52345A)**		2	
307795/01	**Rubber Seating,** for Body (576105)	40—28	2	
3485	**Rim** (572734)	40—29	2	**L.H.D., U.S.A. ONLY**
307796/01	**Lens** (White) (576983)	40—30	2	
307795/03	**Bulb Holder and Plate Assembly** (576986)	40—31	2	
	Bulb (382-12V-21W)		2	
422545/32	**Screw,** securing Front Flasher Lamps		6	
83/648050	**REAR FLASHER LAMP (AMBER LENS) (L.539-53844A)**		2	
83/648064	**Amber Lens and Rim Assembly** (574267)	40—32	2	**R.H.D. AND L.H.D., EXCEPT U.S.A.**
305149/02	**Body Assembly,** complete with Bulb Holder (574234)	40—33	2	
83/638066	**Seating Rubber,** for Lens (575640)	40—34	2	
C.8460	**Seating Rubber,** for Body (574231)	40—35	2	
C.9126	**Bulb** (No. 382-12V-21W)		2	
307804	**REAR FLASHER LAMP (RED LENS) (L.539-53686D)**		2	
305150/01	**Red Lens and Rim Assembly** (574259)	40—32	2	**L.H. DRIVE, U.S.A. ONLY**
305149/02	**Body Assembly,** complete with Bulb Holder (574234)	40—33	2	
83/638066	**Seating Rubber,** for Lens (575640)	40—34	2	
C.8460	**Seating Rubber,** for Body (574231)	40—35	2	
C.9126	**Bulb** (No. 382-12V-21W)		2	
63/637293	**Screw,** securing Rear Flasher Lamp		4	
422508/09	**Washer,** Shakeproof, on Screws		4	

ELECTRICAL EQUIPMENT

Part No.	Description	Plate No.	No. per Unit	Remarks
307805	**FLASHER UNIT (FL.5-35010A)**	40—36	1	
305152	**NUMBER PLATE ILLUMINATION LAMP (532-53278B)**		2	
305152/01	**Cover** (574046)	40—37	2	
305152/02	**Clip,** for Cover (574045)	40—38	2	
305152/03	**Rubber Seating,** for Cover (574044)	40—39	2	
3455	**Interior Adaptor** (553780)	40—40	2	
420757	**Bulb** (989-12V-6W)		2	
63/637323	**Screw,** securing Number Plate Lamp		4	
422508/09	**Washer,** Shakeproof, on Screws		4	
305149	**REVERSE LAMP (L.539-53896A)**		2	
5314	**Lens and Rim Assembly** (574258)	40—41	2	
305149/02	**Body Assembly,** complete with Bulb Holder (576357)	40—42	2	
305149/04	**Seating Rubber,** for Lens (575640)	40—43	2	
C.8460	**Seating Rubber,** for Body (574231)	40—44	2	
C.9126	**Bulb** (No. 382-12V-21W)		2	
305149/01	**LENS AND RIM ASSEMBLY FOR REVERSE LAMP (574258)**	40—41	2	
305149/06	**Lens** (574243)		2	
63/637293	**Screw,** securing Reverse Lamp		4	
422508/09	**Washer,** Shakeproof, on Screws		4	
83/648051	**STOP AND TAIL LAMP (L551-53895A)**		2	
83/648070	**Lens and Rim Assembly** (574615)	40—45	2	
5311	**Bulb Holder** (573828)	40—46	2	
83/638072	**Seating Rubber,** for Lens (576805)	40—47	2	
83/638073	**Seating Rubber,** for Body (574607)	40—48	2	
C.9125	**Bulb** (No. 380-12V-21/6W)		2	
83/648070	**LENS AND RIM ASSEMBLY (574615)**	40—45	2	
83/638071	**Lens,** complete with Reflex (574609)		2	
63/637293	**Screw,** securing Stop and Tail Lamp		4	
422508/09	**Washer,** Shakeproof, on Screw		4	

Part No.	Description	Plate No.	No. per Unit	Remarks
307803	**INTERIOR LIGHT (L.562-56061B)**	40—49	2	
307803/01	**Lens** (535154)		2	
C.9125	**Bulb** (No. 380-12V-21/6W)		2	
305229	**BOOT LIGHT (7/6916)**	40—50	1	
305229/1	**Lens**		1	
423191/0S	**Screw,** securing Light to Boot Lid		2	
427587	**MERCURY SWITCH FOR BOOT LIGHT (052756)**	40—51	1	
989	**Bulb,** 12v. 6 watt (989)		1	
423187/02	**Screw,** securing Switch to Boot Light Base		2	
304881	**FOG LAMP (SFT.576-55128E)**		1	**R.H. DRIVE AND L.H. DRIVE, EXCEPT FRANCE**
5296	**Light Unit** (554813)	40—52	1	
5295	**Bulb Adaptor** (554667)	40—53	1	
323	**Bulb** (No. 323-12V-48W)		1	
306233	**FOG LAMP (SFT.576-55160D)**		1	**L.H. DRIVE, FRANCE**
5296	**Light Unit** (554813)	40—52	1	
5295	**Bulb Adaptor** (554667)	40—53	1	
638	**Bulb,** Yellow (No. 600-12V-48W)		1	
304882	**PASS LAMP (SLR.576-55132E)**		1	**R.H. DRIVE AND L.H. DRIVE EXCEPT FRANCE**
5297	**Light Unit** (554816)	40—54	1	
5295	**Bulb Adaptor** (554667)	40—55	1	
612	**Bulb** (No. 185-12V-48W)		1	
306234	**PASS LAMP (SLR.576-55161D)**		1	**L.H. DRIVE, FRANCE**
5297	**Light Unit** (554816)	40—54	1	
5295	**Bulb,** Adaptor (554667)	40—55	1	
638	**Bulb,** Yellow (No. 600-12V-48W)		1	

ELECTRICAL EQUIPMENT

Part No.	Description	Plate No.	No. per Unit	Remarks
306332	**SPEEDOMETER (120 M.P.H.) (7229561) INCORPORATING MAIN BEAM AND FLASHER WARNING LIGHTS**	40—56	1	**R.H. DRIVE AND L.H. DRIVE, EXCEPT EUROPE AND AUSTRALIA**
307797	**SPEEDOMETER (120 M.P.H.) INCORPORATING MAIN BEAM AND IGNITION WARNING LIGHTS**		1	**R.H. DRIVE, AUSTRALIA**
306334	**SPEEDOMETER (200 K.P.H.) INCORPORATING MAIN BEAM AND FLASHER WARNING LIGHTS (7229562)**		1	**L.H. DRIVE, EUROPE**
425785	**Bulb Holder** and Wire (Illumination)		1	
425108/01	**Bulb Holder** and Wire (Flasher or Ignition)		1	
425108/03	**Bulb Holder** and Wire (Main Beam)		1	
420757	**Bulb** (No. 989-12V-6W)		3	
307207	**FLEXIBLE SPEEDOMETER CABLE ASSEMBLY**		1	**R.H. DRIVE** Fitted from Chassis No. 98300 to 98398
307207/01	**Inner Cable**		1	
307207/02	**Outer Cable**		1	
425077	**Clip,** securing Speedometer Cable to Flywheel Housing		1	
307718	**FLEXIBLE SPEEDOMETER CABLE ASSEMBLY**	40—57	1	**R.H. DRIVE** Fitted to Chassis No. 98399 and subs. **L.H. DRIVE** Fitted to Chassis No. 98751 and subs.
307718/01	**Inner Cable**		1	
307718/02	**Outer Cable**		1	
431034	**Clip,** securing Speedometer Cable to Flywheel Housing		1	
22104/03	**Bolt,** securing Clip		1	
430241/04	**Washer,** Spring, on Bolt		1	
428219/02	**OIL WARNING LIGHT (GREEN) (38144A)**	40—58	1	
987	**Bulb** (No. 987-12V-2.2W MES)		1	
428219/03	**IGNITION WARNING LIGHT (RED) (38100A)**	40—58	1	**R.H. DRIVE AND L.H. DRIVE, EXCEPT AUSTRALIA**
987	**Bulb** (No. 987-12V-2.2W. MES)		1	

ELECTRICAL EQUIPMENT

Part No.	Description	Plate No.	No. per Unit	Remarks
428219/04	**FLASHER WARNING LIGHT (GREEN ARROWED) (38124)**		2	R.H. DRIVE, AUSTRALIA
987	**Bulb** (No. 987-12V-2.2W. MES)		2	
306336	**AMMETER (7228333)**	41—1	1	
426721	**Clamp and Lamp Bracket** (E/A217)		1	
425785	**Bulb Holder and Wire** (1570852)		1	
420757	**Bulb** (No. 989-12V-6W)		1	
306337	**PETROL GAUGE (7228332)**	41—2	1	
308232	**Clamp and Lamp Bracket**		1	
425785	**Bulb Holder and Wire** (1570852)		1	
420757	**Bulb** (No. 989-12V-6W)		1	
304826	**PETROL TANK GAUGE UNIT (7228110)**	41—3	1	
306341	**CLOCK (7229565)**	41—4	1	
7186	**WINDSCREEN WIPER MOTOR (75311B-DR3)**	41—5	1	R.H. DRIVE
7187	**Brush Gear** (743171)		2	
3509	**Brushes** (729367)		1 set	
6551	**Spring,** for Brush (735631)		2	
7188	**Cover,** Gearbox (743924)		1	
7189	**Armature** (743929)		1	
7190	**Coil** (744907)		1	
7191	**Shaft and Gear** (744913)		1	
6555	**Connecting Rod** (740563)		1	
7192	**Limit Switch** (743846)		1	
7185	**WINDSCREEN WIPER MOTOR (75310A-DR3)**		1	L.H. DRIVE
	All other items as for Windscreen Wiper Motor 7186			

ELECTRICAL EQUIPMENT

Part No.	Description	Plate No.	No. per Unit	Remarks
307820	**WHEELBOX ASSEMBLY FOR WIND-SCREEN WIPERS (72673B)**	41—6	2	
9399	**Spindle and Gear** (743088)		2	
C.5522/2	**Rubber Tube,** for Spondles (740711)		2	
136076	**OUTER CASING, MOTOR TO WHEEL-BOX (54710470)**	41—7	1	
63/638022	**OUTER CASING, WHEELBOX TO WHEELBOX (745226)**	41—8	1	
C.5450	**OUTER CASING, WHEELBOX EX-TENSION (740746)**	41—9	1	
307819	**ARM FOR WINDSCREEN WIPER (54711557)**	41—10	2	**R.H. DRIVE**
307821	**ARM FOR WINDSCREEN WIPER (54711558)**		2	**L.H. DRIVE**
83/638001	**BLADE FOR WINDSCREEN WIPER ARMS (L BOW 11″) (737897)**	41—11	2	
51/638009	**GROMMET FOR OUTER CASING**		1	
92/635040	**BRACKET FOR WINDSCREEN WIPER MOTOR**		1	
422544/10	**Bolt,** securing Bracket to Dash		4	
422543/2	**Nut,** on Bolt		4	
423199/02	**Washer,** Plain, on Bolt		4	
422508/10	**Washer,** Shakeproof, under Nut		4	

Part No.	Description	Plate No.	No. per Unit	Remarks
136153	**HORN (LOW NOTE) (69046F-WT.618)**	41—12	1	
136154	**HORN (HIGH NOTE) (69047F-WT.618)**	41—12	1	
8485	**Diaphragm** (Low Note) (702836)		1	
8486	**Diaphragm** (High Note) (702851)		1	
8484	**Contact Set** (702687)		1	
11104/06	**Bolt,** securing Horns		4	
13104	**Nut,** on Bolt		4	
430241/04	**Washer,** Spring, under Nut		4	
306304	**REVERSE LIGHT SWITCH (SS.10-1)**	41—13	1	
306304	**SOLENOID CIRCUIT BREAKER SWITCH (SS.10-1)**	41—13	1	
404381	**DIPPER SWITCH (FS.22/1-31284)**	41—14	1	
422545/23	**Screw,** securing Switch		2	
422508/07	**Washer,** Shakeproof, on Screw		2	
C.2666	**INSPECTION AND CHARGE SOCKET AND PLUG ASSEMBLY (38604)**	41—15	1	
417970/01	**Plug Assembly** (304919)		1	
417970/02	**Positive Socket** (304925)		1	
417970/03	**Negative Socket** (304926)		1	
417970/04	**Base and Posts Assembly** (304922)		1	
405330	**Grommet,** Rubber (340168)		1	
422545/47	**Screw,** securing Socket		2	
422508/05	**Washer,** Shakeproof, on Screw		2	
306339	**THERMOMETER**	41—16	1	
133550/07	**Adaptor,** for Capillary Tube in Thermostat Body (1509509)		1	
307801	**STARTER AND IGNITION SWITCH (S.60-31678)**	41—17	1	
424926	**Ignition Lock**	41—18	1	
424927	**Ignition Key**		1	

ELECTRICAL EQUIPMENT

Part No.	Description	Plate No.	No. per Unit	Remarks
305210	**HEAD SIDE AND FOG LAMP SWITCH (PRS.7-31428)**	41—19	1	
431743	**Switch,** Knob (OFF, SIDE, HEAD, FOG)	41—20	1	
425020	**Bracket,** for Switch		1	
423193/18	**Screw,** securing Bracket		4	
307802	**HEATER UNIT SWITCH (PS.7/3-31557)**	41—21	1	
431750	**Switch,** Knob (H)	41—22	1	
307798	**PANEL LIGHT RHEOSTAT SWITCH (CHR.1-78331)**	41—23	1	
431745	**Switch, Knob,** (P)	41—24	1	
307802	**PASS LAMP SWITCH (PS.7/3-31557)**	41—25	1	
431748	**Switch, Knob** (S)	41—26	1	
307799	**WINDSCREEN WIPER SWITCH, INCORPORATING WASHER CONTROL (PRS.9-31457)**		1	Superseded by 308059
431744	**Knob** (Wiper)		1	
308059	**WINDSCREEN WIPER SWITCH (31427)**	41—27	1	Supersedes 307799
431744	**Knob** (Wiper)	41—28	1	
425020	**Bracket,** for Switch		4	
423193/18	**Screw,** securing Bracket		4	
307800	**CIGAR LIGHTER (EL.2406/04)**	41—29	1	
431132	**INTERIOR LIGHT SWITCH (31411)**	41—30	1	

Part No.	Description	Plate No.	No. per Unit	Remarks
431741	COURTESY LIGHT SWITCH IN DOOR PILLARS (SSB.04085/C)	41—31	4	
92/637025	**Rubber Buffer,** in Doors for Switch	41—32	4	
427853	STOP LIGHT SWITCH IN 5 WAY UNION (H.L.2)	41—33	1	
422569	OIL PRESSURE INDICATOR SWITCH	41—34	1	
302801	BATTERY (GTW.11A-12V-4011600)		1	
307741	BATTERY CABLE (POSITIVE TO EARTH) (812113)		1	R.H. DRIVE
308660	BATTERY CABLE (POSITIVE TO EARTH) (54944339)		1	L.H. DRIVE
307739	BATTERY CABLE (NEGATIVE TO SOLENOID) (5941215)		1	R.H. DRIVE
308661	BATTERY CABLE (NEGATIVE TO SOLENOID) (54944340)		1	L.H. DRIVE
307740	CABLE (SOLENOID TO STARTER MOTOR) (54941340)		1	

ELECTRICAL EQUIPMENT

Part No.	Description	Plate No.	No. per Unit	Remarks
425070	**CABLE, ENGINE TO EARTH (822097)**		1	
428813	**CABLE, BODY TO CHASSIS BONDING EARTH**		1	
425154	**Screw,** fixing for Battery Lugs (186111)		2	
136027	**INSTRUMENT PANEL HARNESS (54941224)**		1	
26215	**BODY HARNESS (54941228)**		1	**R.H. DRIVE ONLY**
26230	**BODY HARNESS (54944824)**		1	**L.H. DRIVE ONLY**
136026	**BOOT HARNESS (54941227)**		1	
305243	**NUMBER PLATE ILLUMINATION HARNESS (862058)**		1	
307743	**HARNESS—INTERIOR LIGHT TO MAIN HARNESS (54941226)**		2	
	ELECTRICAL CABLES			
427605	**Cable,** for Mercury Switch (Boot Interior Light)		1	
426826	**Cable,** for Petrol Tank Gauge Unit (862059)		1	
307793	**Cable,** for Windtone Horns (54941670)		1	
307742	**Cable** , for Interior Light (54941225)		1	
431047	**Cable,** for Door Switch (L.H. Front to L.H. Rear) (54941222)		2	
431041	**Cable,** from L.H. Door Switch to Main Harness (54941216)		2	
431042	**Cable,** interconnecting L.H. Courtesy Light and Switch (54941217)		1	
431045	**Cable,** from R.H. Door Switch to Main Harness (54941220)		1	
431048	**Cable,** interconnecting Charge Socket and Fuses (54941223)		1	

Part No.	Description	Plate No.	No. per Unit	Remarks
	ELECTRICAL CABLES *(continued)*			
431126	**Cable,** for R.H. Flasher lamp (54941671)		1	
431125	**Cable,** for L.H. Flasher lamp (54941672		1	
426846	**Cable,** for R.H. Pass Lamp (862276)		1	
426845	**Cable,** for L.H. Fog Lamp (862275)		1	
431463	**Cable,** for Fog Lamp Switch		1	
427329	**Cable,** for Windscreen Wiper		1	
428233	**Earth Cable,** for Stop Tail and Reverse Lamp		1	
427564	**Earth Cable,** for Petrol Tank		1	
431044	**Earth Cable,** for Interior Light Switch (54941219)		1	
431111	**Earth Cable,** for Charge Socket (54941341)		1	
	GROMMETS			
C.2880	**Grommets,** for Intergear Lock, Door Light Switch, and Tail Lamp Harness (859341)		5	
C.2850	**Grommets,** for Throttle Control, Mixture Control, Bonnet Release Cable, Heater and Demister, and Petrol Reserve Cable (859341)		6	
C.2706	**Grommets,** for Fog Lamp, Pass Lamp, and Side Lamp Cables in Apron (859059)		4	
C.2706	**Grommets,** for Windscreen Washer Tube (859059)		3	
C.2707	**Grommets,** for Headlamp, and Sidelamp Cables in Side-shields (859060)		4	
C.2708	**Grommets,** for Cables in Dash (159061)		8	
405222	**Grommets,** for Water Temperature Capillary Tube		1	
	CLIPS			
C.1040/17	**Clips,** securing Solenoid Cables (187048)		2	
C.1040/12	**Clips,** securing Harness to Front of Dash (187042)		5	
C.1040/3	**Clips,** securing Main Harness to Front of Dash (187051)		2	
408619	**Clips,** securing Headlamp Cables (187048)		1	
424770	**Clips,** securing Solenoid to Battery Cable (850276)		1	
411480	**Clips,** securing Headlamp Cables and Boot Harness		2	
C.1071/2	**Clips,** securing Horn Lead to Front Cross Member (850881)		3	

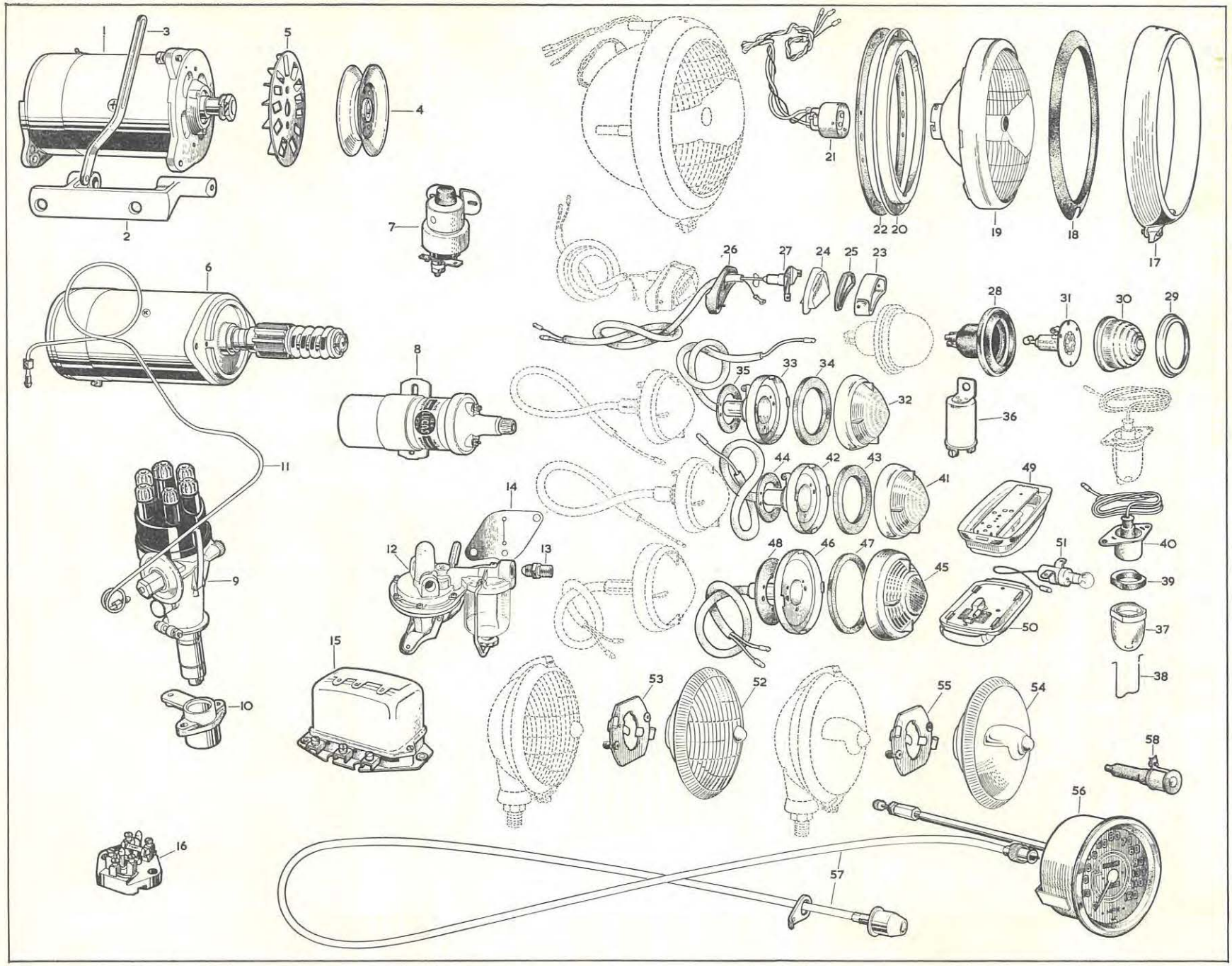
1
2
3
4
5
6
7
8
9
10
11
12
13
14
15
16
17
18
19
20
21
22
23
24
25
26
27
28
29
30
31
32
33
34
35
36
37
38
39
40
41
42
43
44
45
46
47
48
49
50
51
52
53
54
55
56
57
58

PLATE 40

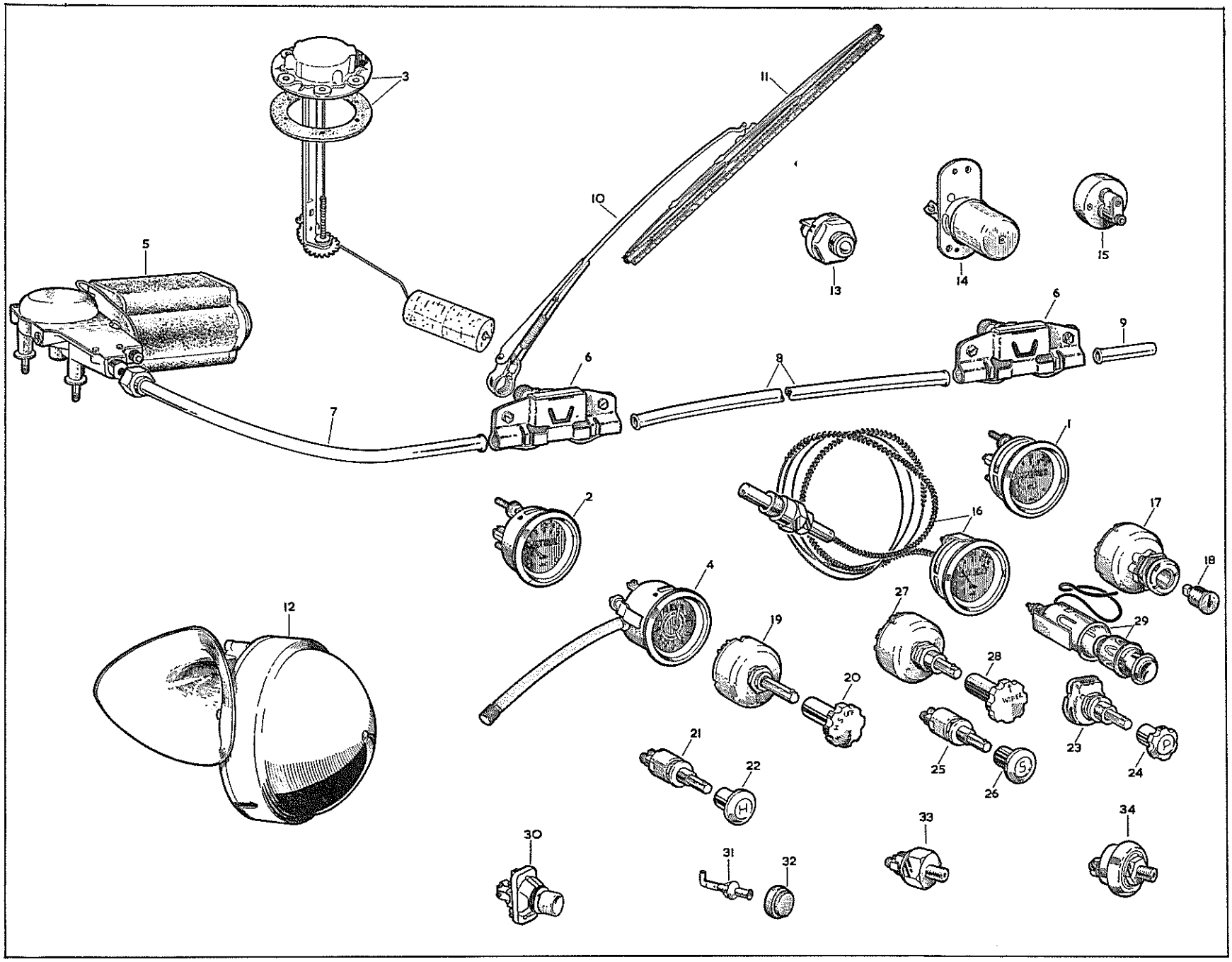
1
2
3
4
5
6
7
8
9
10
11
12
13
14
15
16
17
18
19
20
21
22
23
24
25
26
27
28
29
30
31
32
33
34

PLATE 41

ELECTRICAL EQUIPMENT

Part No.	Description	Plate No.	No. per Unit	Remarks
136300	**DYNAMO (C.45-PV.6-22530A)**	42—1	1	**NOT REQUIRED WITH HYDROSTEER POWER-ASSISTED STEERING**
7906	**Brushes** (54210090)		1 set	
7910	**Armature** (239428)		1	
2789	**Field Coils** (238820)		1	
136300/02	**Frame Bracket**—Commutator End (54211094)		1	
2757	**Bearing,** Driving End (189308)		1	
2749	**Nut,** on Shaft (180620)		1	
7909	**Bushing** (239263)		1	
136300/04	**Oiler,** for Felt and Disc (239368)		1	
7607	**Spring,** for Brush Tension (54210091)		1 set	
302681	**BRACKET SUPPORTING DYNAMO (S.302681A)**	42—2	1	
21107/08	**Bolt,** securing Bracket to Cylinder Head		2	
430241/07	**Washer,** Spring, on Bolt		2	
424862	**Bolt,** securing Dynamo to Support Bracket (Front)		1	
13305	**Nut**		1	
422540/05	**Washer,** D.C., Spring, under Nut		1	
422501/07	**Split Pin,** securing Nut		1	
425259	**Pin,** Mounting Dynamo to Support Bracket (Rear)		1	**NOT REQUIRED WITH HYDROSTEER**
13305	**Nut,** on Pin		1	
422500/02	**Washer,** Plain, under Nut		1	
422501/07	**Split Pin,** securing Nut		1	
302699	**ADJUSTING STRIP FOR DYNAMO**	42—3	1	
425236	**Bolt,** securing Dynamo to Adjusting Strip (112640)		1	
401883	**Washer,** Serrated, on Bolt		1	
430241/05	**Washer,** Spring, on Bolt		1	
13305	**Nut,** securing Adjusting Strip to Crankcase		1	
422540/05	**Washer,** D.C., Spring, on Bolt		1	
306272	**DYNAMO PULLEY ASSEMBLY**	42—4	1	
304503	**FAN FOR DYNAMO PULLEY**	42—5	1	

ELECTRICAL EQUIPMENT

Part No.	Description	Plate No.	No. per Unit	Remarks
133544	**STARTER MOTOR (M.418G, 25533D)**	42—6	1	
2804	**Brush** (255659)		1 set	
2811	**Spring,** for Brush Tension (270004)		1 set	
2800	**Armature** (255463)		1	
2810	**Field Coils** (256578)		1 set	
2801	**Bushing,** Commutator End (255491)		1	
2812	**Bushing,** Driving End (270038)		1	
6544	**Cover Band** (255557)		1	
6546	**Bracket,** Commutator End (256748)		1	
2806	**Spring,** retaining Pinion (255728)		1	
2796	**Pinion and Sleeve** (255194)		1	
2818	**Main Spring** (270889)		1	
2808	**Nut,** on Shaft, securing Dynamo Pulley and Fan (255851)		1	
11106/18	**Bolt,** securing Starter Motor		2	
422514/07	**Nut,** Nyloc, on Bolt		2	
308723	**SOLENOID FOR STARTER MOTOR (2ST-76469A)**	42—7	1	
422544/10	**Bolt,** securing Solenoid to Dash		2	
423199/2	**Washer,** Plain, on Bolt		2	
430241/03	**Washer,** Spring, on Bolts		2	
308101	**IGNITION COIL (HA.12-45102E)**	42—8	1	**Alternative to 308372**
C.5451	**Nut,** securing Ignition Cable in centre of Coil (408120)		1	
C.5452	**Washer,** Spring, under Nut (185015)		1	
308372	**IGNITION COIL (7952470)**	42—8	1	**Alternative to 308101**
12105/04	**Screw,** Set, securing Coil to Cylinder Block		2	
430241/05	**Washer,** Spring, on Setscrew		2	
136403	**DISTRIBUTOR (DM.6-40716A)**	42—9	1	
6478	**Cap** (418857)		1	
6479	**Brush,** and Spring (418856)		1	
6060	**Rotor Arm** (418726)		1	
C.11990	**Contact Set** (420197)		1	
8031	**Condenser** (423871)		1	
135969/01	**Spring Auto Advance** (54410271)		1 set	
134473/02	**Vacuum Unit** (423040)		1	
2943	**Driving Dog** (410601)		1	
413819	**Washer,** for Driving Dog		1	
425084	**Clamp,** securing Distributor (420618)		1	
C.11906	**Terminal Nut** (410600)		7	
C.5452	**Washer,** Spring, under Nut (185015)		7	
430786	**Bracket,** for Distributor (P.430786)	42—10	1	
22105/07	**Screw,** Set, securing Bracket		2	
430241/05	**Washer,** Spring, on Setscrew		2	
22104/06	**Screw,** Set, securing Ignition Lever		1	
422500/01	**Washer,** Plain, on Setscrews		1	

Part No.	Description	Plate No.	No. per Unit	Remarks
135372	**SUCTION PIPE FROM FRONT CARBURETTER TO DISTRIBUTOR VACUUM CONTROL**	42—11	1	
133007	**PETROL PUMP (UE-1524750)**	42—12	1	
133007/01	**Valve Assembly** (5591860)		2	
133007/02	**Gasket,** for Valve (1524370)		1	
133007/03	**Diaphragm Assembly** (1524628)		1	
133007/04	**Spring,** for Diaphragm (1524013)		1	
133007/10	**Spring,** for Hand Primer (1524463)		1	
133007/05	**Rocker Arm** (1524151)		1	
133007/06	**Spring,** for Rocker Arm (856927)		1	
133007/07	**Pin,** for Rocker Arm (856035)		1	
133007/08	**Circlip,** for Pin (1524112)		2	
133007/09	**Link Assembly** (856961)		1	
7300	**Bowl,** for Filter (Glass) (1523620)		1	
7298	**Gasket** (5593321)		1	
133007/14	**Filter** (854009)		1	
133007/15	**Screw,** securing Top Casting to Body (855493)		6	
133007/16	**Washer,** on Screw (114648)		6	
422787	**Union,** Straight (1524729)	42—13	2	
425103	**Gasket,** between Petrol Pump and Cylinder Head (1524686)	42—14	1	
21105/08	**Bolt,** securing Petrol Pump to Cylinder Block		2	
430241/05	**Washer,** Spring, on Bolt		2	
308364	**CONTROL BOX (37304B-RB.310)**	42—15	1	
7912	**Cover** (54380178)		1	
7913	**Screw,** securing Cover (198886)		2	
7916	**Gasket,** Cover Sealing (226479)		1	
8554	**Resistance** (54380858)		1	
11104/08	**Bolt,** securing Control Box to Dash		3	
422500/01	**Washer,** Plain, on Bolt		3	
308097	**FUSE BOX (033283-4FJ)**	42—16	1	
C.5638	**Fuse,** 35 AMP. (188218)		4	
6471	**Terminal Screw** (121610)		4	
422545/13	**Screw,** securing Fuse Box to Dash		1	
9390	**COVER OVER FUSE BOX (54380114)**		1	

ELECTRICAL EQUIPMENT

Part No.	Description	Plate No.	No. per Unit	Remarks
136150	**HEADLAMP ASSEMBLY (58260A/D-F.700)**		2	
136150/01	**Outer Rim** (54520073)	42—17	2	
5221	**Screw,** securing Outer Rim (186137)		2	
3446	**Rubber Dust Excluder** (552906)	42—18	2	**R.H. DRIVE ONLY HOME AND EXPORT**
134316/04	**Light Unit** (553921)	42—19	2	
134316/08	**Plate,** retaining Light Unit (554872)	42—20	2	
6057	**Bulb Adaptor** (554602)	42—21	2	
136150/02	**Rubber Gasket** (54520131)	42—22	2	
135122/03	**Bulb** (414-12V-50/40W)		2	
136151	**HEADLAMP ASSEMBLY (58479D-F.700)**		2	
136151/05	**Outer Rim** (54520443)		2	
3446	**Rubber Dust Excluder** (552906)		2	**L.H. DRIVE, EXPORT EXCEPT EUROPE**
3454	**Adaptor,** complete with Cables (553724)		2	
7172	**Rubber Gasket** (554178)		2	
8077	**Plate,** retaining Light Unit (554179)		2	
136152	**HEADLAMP ASSEMBLY (58560A-F.700)**		2	
136150/01	**Outer Rim** (54520073)		2	
5221	**Screw,** securing Outer Rim (186137)		2	
3446	**Rubber Dust Excluder** (552906)		2	**L.H. DRIVE, EUROPE, EXCEPT FRANCE**
134316/08	**Plate,** retaining Light Unit (554872)		2	
7762	**Light Unit** (556452)		2	
7764	**Bulb Adaptor,** complete with Cables (553738)		2	
136150/02	**Rubber Gasket** (54520131)		2	
136152/04	**Bulb** (410-12V-45/40W)		2	
136199	**HEADLAMP ASSEMBLY (58561A-F.700EF)**		2	
			2	
136150/01	**Outer Rim** (54520073)		2	
5221	**Screw,** securing Outer Rim (186137)		2	
3446	**Rubber Dust Excluder** (552906)		2	**L.H. DRIVE, FRANCE ONLY**
134316/08	**Plate,** retaining Light Unit (554872)		2	
7762	**Light Unit** (556452)		2	
7764	**Adaptor,** complete with Cables (553738)		2	
136150/02	**Rubber Gasket** (54520131)		2	
136199/01	**Bulb**—(Yellow) (411-12V-45/40W)		2	
7762	**LIGHT UNIT (556452)**		2	
7765	**Spring,** retaining Bulb (556442)		2	
425286/16	**Headlamp Screw**		8	
88524	**Spire Nut** (SNO.1742/17/8)		8	

Part No.	Description	Plate No.	No. per Unit	Remarks
308032	**SIDELAMP COMPLETE (52426B-517)**		2	
307794/01	**Rim** (516556)	42—23	2	
307794/02	**Screw,** securing Rim (136231)		4	
307794/03	**Lens** (516386)	42—24	2	
307794/04	**Gasket,** Sealing Lens (516395)	42—25	2	
307794/05	**Seating Rubber,** for Lamp (516553)	42—26	2	
3455	**Bulb Holder** (553780)	42—27	2	
989	**Bulb** (989-12V-6W)		2	
422547/14	**Screw,** for Sidelamps		4	
430241/03	**Washer,** Spring, on Screw		4	
307795	**FRONT FLASHER LAMP (AMBER LENS) (52337A-L.594)**		2	
307795/01	**Rubber Seating,** for Body (576105)	42—28	2	**R.H. DRIVE, HOME AND EXPORT L.H. DRIVE, EXPORT, EUROPE**
3485	**Rim** (572734)	42—29	2	
307795/02	**Lens** (Amber) (576108)	42—30	2	
307795/03	**Bulb Holder and Plate Assembly** (576986)	42—31	2	
C.9126	**Bulb** (382-12V-21W)		2	
307796	**FRONT FLASHER LAMP (WHITE LENS) (52345A-L.594)**		2	
307795/01	**Rubber Seating,** for Body (576105)	42—28	2	**L.H. DRIVE, EXPORT, EXCEPT EUROPE**
3485	**Rim** (572734)	42—29	2	
307796/01	**Lens** (White) (576983)	42—30	2	
307795/03	**Bulb Holder and Plate Assembly** (576986)		2	
C.9126	**Bulb** (382-12V-21W)		2	
422545/32	**Screw,** for Flasher Lamps		6	
83/648050	**REAR FLASHER LAMP (AMBER LENS) (53844A-L.539)**		2	
83/648064	**Amber Lens and Rim Assembly** (574267)	42—32	2	**R.H. DRIVE, HOME AND EXPORT L.H. DRIVE, EXPORT, EUROPE**
305149/02	**Body Assembly,** complete with Bulb Holder (574234)	42—33	2	
83/638066	**Seating Rubber,** for Lens (575640)	42—34	2	
8460	**Seating Rubber,** for Body (574231)	42—35	2	
C.9126	**Bulb** (382-12V-21W)		2	
307804	**REAR FLASHER LAMP (RED LENS) (53686D-L.539)**		2	
305150/01	**Red Lens and Rim Assembly** (574259)	42—32	2	**L.H. DRIVE, EXPORT EXCEPT EUROPE**
305149/02	**Body Assembly,** complete with Bulb Holder (574234)	42—33	2	
83/638066	**Seating Rubber,** for Lens (575640)	42—34	2	
C.8460	**Seating Rubber,** for Body (574231)	42—35	2	
C.9126	**Bulb** (382-12V-21W)		2	
63/637293	**Screw,** for Rear Flasher Lamp		4	
430241/03	**Washer,** Spring, on Screw		4	

ELECTRICAL EQUIPMENT

Part No.	Description	Plate No.	No. per Unit	Remarks
308281	**FLASHER UNIT (35020-FL.5)**	42—36	1	
11104/03	**Bolt,** securing Flasher Unit to Dash		1	
430241/04	**Washer,** Spring, on Bolt		1	
305152	**NUMBER PLATE ILLUMINATION LAMP (53278B-532)**		2	
305152/01	**Cover** (574046)	42—37	2	
305152/02	**Clip,** for Cover (574045)	42—38	2	
305152/03	**Rubber Seating,** for Cover (574044)	42—39	2	
3455	**Interior Adaptor** (553780)	42—40	2	
989	**Bulb** (989-12V-6W)		2	
63/637323	**Screw,** for Number Plate Lamp		4	
430241/03	**Washer,** Spring, on Screw		4	
305149	**REVERSE LAMP (53896A-L.539)**		2	
5314	**Lens and Rim Assembly** (574258)	42—41	2	
305149/02	**Body Assembly,** complete with Bulb Holder (576357)	42—42	2	
305149/04	**Seating Rubber,** for Lens (575640)	42—43	2	
C.8460	**Seating Rubber,** for Body (574231)	42—44	2	
C.9126	**Bulb** (382-12V-21W)		2	
63/637293	**Screw,** for Reverse Lamp		4	
430241/03	**Washer,** Spring, on Screw		4	
83/648051	**STOP AND TAIL LAMP (53895A-L.551)**		2	
83/648070	**Lens and Rim Assembly** (574615)	42—45	2	
5311	**Bulb Holder** (573828)	42—46	2	
83/638072	**Seating Rubber,** for Lens (576805)	42—47	2	
83/638073	**Seating Rubber,** for Body (574607)	42—48	2	
9125	**Bulb** (380-12V-21/6W)		2	
83/648070	**LENS AND RIM ASSEMBLY (574615)**	42—45	2	
83/638071	**Lens,** complete with Reflex (574609)		2	
63/637293	**Screw,** Stop and Tail Lamp		4	
430241/03	**Washer,** Spring, on Screw		4	
307803	**INTERIOR LIGHT (56061B-L.562)**	42—49	2	
307803/01	**Lens** (535154)		2	
C.9125	**Bulb** (380-12V-21/6)		2	

Part No.	Description	Plate No.	No. per Unit	Remarks
305229	**BOOT LIGHT (7/6916)**	42—50	1	
305229/1	**Lens**		1	
423191/05	**Screw,** securing Light to Boot Lid		2	
427587	**MERCURY SWITCH FOR BOOT LIGHT (052756)**	42—51	1	
989	**Bulb,** 12v. 6 watt (989)		1	
423187/02	**Screw,** securing Switch to Boot Light Base		2	
304881	**FOG LAMP (55128E-SFT.576)**		1	R.H. DRIVE, HOME AND EXPORT L.H. DRIVE, EXPORT, EXCEPT FRANCE
5296	**Light Unit** (554813)	42—52	1	
5295	**Bulb Adaptor** (554667)	42—53	1	
323	**Bulb** (323-12V-48W)		1	
306233	**FOG LAMP (55160D-SFT.576)**		1	L.H. DRIVE, FRANCE
5296	**Light Unit** (554813)	42—52	1	
5295	**Bulb Adaptor** (554667)	42—53	1	
638	**Bulb** (Yellow) (600-12V-48W)		1	
304882	**LONG RANGE DRIVING LAMP (55132E-SLR.576)**		1	R.H. DRIVE, HOME AND EXPORT L.H. DRIVE, EXPORT, EXCEPT FRANCE
5297	**Light Unit** (554816)	42—54	1	
5295	**Bulb Adaptor** (554667)	42—55	1	
612	**Bulb** (185-12-48W)		1	
306234	**LONG RANGE DRIVING LAMP (55161D-SLR.576)**		1	L.H. DRIVE, FRANCE
5297	**Light Unit** (554816)	42—54	1	
5295	**Bulb Adaptor** (554667)	42—55	1	
638	**Bulb** (Yellow) (600-12V-48W)		1	
308358	**SPEEDOMETER (120 M.P.H.) (SN.6318/00) INCORPORATING MAIN BEAM AND IGNITION WARNING LIGHTS**	42—56	1	R.H. DRIVE, HOME AND EXPORT L.H. DRIVE, EXPORT, EXCEPT EUROPE

ELECTRICAL EQUIPMENT

Part No.	Description	Plate No.	No. per Unit	Remarks
308359	**SPEEDOMETER (200 K.P.H.) (SN.6318/01) INCORPORATING MAIN BEAM AND IGNITION WARNING LIGHTS**		1	**L.H. DRIVE, EXPORT, EUROPE**
308327	**FLEXIBLE SPEEDOMETER CABLE ASSEMBLY (DF.1302/00) (5′ 0″ LONG)**	42—57	1	
308327/01	**Inner Cable**		1	
308327/02	**Outer Cable**		1	
431034	**Clip,** securing Speedometer Cable to Flywheel Housing		1	
21104/03	**Bolt,** securing Speedometer Cable to Gearbox		1	
430241/04	**Washer,** Spring, on Bolt		1	
308751	**OIL PRESSURE WARNING LIGHT (GREEN) (54360259)**	42—58	1	
308750	**FLASHER WARNING LIGHT (GREEN ARROWED) (54360661)**	42—59	2	
308705	**AMMETER (36276A-CZU.60)**	43—1	1	
9391	**Clamp,** securing Ammeter (54360655)		1	
9392	**Bulb Holder** (54360320)		1	
987	**Bulb** (987-12V-2.2W)		1	
8057	**Connector** (Lucar " M " Large) (199317)		2	
8058	**Connector** (Lucar " M " Small) (199275)		2	
308361	**PETROL GAUGE (FG.2331/10)**	43—2	1	
308362	**PETROL TANK UNIT (FT.5301/10)**	43—3	1	
C.937	**Cork Seating Washer,** for Petrol Tank Unit	43—4	1	
304062	**Rubber Boot,** for Petrol Tank Unit	43—5	1	

ELECTRICAL EQUIPMENT

Part No.	Description	Plate No.	No. per Unit	Remarks
308360	**CLOCK (C.E.2194/10)**	43—6	1	
308363	**TEMPERATURE GAUGE (TC.4304/03)**	43—7	1	
308080	**TEMPERATURE TRANSMITTER (TT.3800/00)**	43—8	1	
431425	**STARTER AND IGNITION SWITCH (31799B-47SA)**	43—9	1	
432426	**Bracket,** for Starter and Ignition Switch		1	
87103/03	**Screw,** securing Bracket		3	
431899	**SWITCH, LIGHTING (31840D-57SA)**	43—10	1	
431897	**SWITCH, WINDSCREEN WIPER (31839D-57SA)**	43—11	1	
308817	**SWITCH, PANEL LIGHT (34341-65SA)**	43—12	1	
308817	**SWITCH, HEATER (34341-65SA)**	43—12	1	
431902	**Bezel,** for Lighting, Screen Wiper, Panel and Heater Switches	43—13	4	
431889	**DESIGNATION PLATE "HEATER"**		1	
431890	**DESIGNATION PLATE "WIPER"**		1	
431891	**DESIGNATION PLATE "LIGHTS"**		1	

ELECTRICAL EQUIPMENT

Part No.	Description	Plate No.	No. per Unit	Remarks
431892	**DESIGNATION PLATE "PANEL"**		1	
431900	**Plate,** Switch Mounting, L.H.		1	
308400	**Plate,** Switch Mounting, R.H.		1	
87103/02	**Screw,** securing Switch Mounting Plate		8	
307800	**CIGAR LIGHTER (EL.2406/04)**	43—14	1	
432009	**SWITCH, FOG LAMP (34285A-PS7)**	43—15	1	
431925/04	**Knob 'F'** for Switch (54333199)	43—16	1	
432009	**SWITCH, LONG RANGE DRIVING LAMP (34285A-PS7)**	43—15	1	
431925/06	**Knob 'L'** for Switch (54333198)	43—17	1	
307759/06	**PETROL RESERVE CONTROL (32606)**		1	
421925/01	**Knob 'R'** for Control (54660276)		1	
307759/07	**MIXTURE CONTROL (32604)**		1	
421925/03	**Knob 'M'** for Control (54660274)		1	
307759/10	**THROTTLE CONTROL**		1	
431925/02	**Knob 'T'** for Control (54660275)		1	
432098	**Plate,** Mounting for Throttle and Mixture Controls		2	
87103/02	**Screw,** securing Mounting Plates		8	
307464/03	**INTERMEDIATE GEAR LOCK CONTROL**		1	
431429	**DIPPER SWITCH (31800A)**	43—18	1	
426086/38	**Screw,** securing Dipper Switch		2	

ELECTRICAL EQUIPMENT

Part No.	Description	Plate No.	No. per Unit	Remarks
431551	**SWITCH STOP LIGHT (31882A-HL.2)**	43—19	1	
431132	**SWITCH INTERIOR LIGHT (31411)**	43—20	2	
431741	**SWITCH COURTESY LIGHT (SSB.04085/C)**	43—21	4	
308374	**SWITCH REVERSE LIGHT (31824B-SS.10/1)**	43—22	1	
422508/28	**Washer,** Shakeproof, for Switch		1	
308374	**SWITCH/SOLENOID CIRCUIT BREAKER (31824B-SS.10/1)**	43—22	1	
422508/28	**Washer,** Shakeproof, for Switch		1	
302801	**BATTERY (24016437-BT.11A)**		1	
425154	**Screw,** fixing for Battery Lugs (186111)		2	
307741	**BATTERY CABLE (POSITIVE TO EARTH) (812113)**		1	
307739	**BATTERY CABLE (NEGATIVE TO SOLENOID) (54941215)**		1	**R.H. DRIVE**
308661	**BATTERY CABLE (NEGATIVE TO SOLENOID) (54944340)**		1	**L.H. DRIVE**
307740	**CABLE SOLENOID TO STARTER MOTOR (54941340)**		1	

ELECTRICAL EQUIPMENT

Part No.	Description	Plate No.	No. per Unit	Remarks
425070	**CABLE ENGINE TO BODY EARTH (822097)**		1	
428813	**CABLE BODY TO CHASSIS EARTH (863958)**		1	
136251	**WINDSCREEN WIPER MOTOR (75371A-DR.2)**	43—23	1	
7187	**Brush Gear** (743171)		1	
3509	**Brushes** (729367)		1 set	
6551	**Spring,** for Brush (735631)		2	
9394	**Armature** (743029)		1	
9395	**Coil** (744009)		1	
9396	**Shaft and Gear** (744744)		1	
9397	**Connecting Rod** (743068)		1	
9398	**Limit Switch** (744325)		1	
9605	**Crosshead and Rack** (743221)		1	
307820	**WHEELBOX ASSEMBLY FOR WINDSCREEN WIPERS (72673B)**	43—24	2	
9399	**Spindle and Gear** (743088)		2	
C.5522/2	**Rubber Tube,** for Spindles (740711)		2	
136076	**OUTER CASING, MOTOR TO WHEELBOX (54710470)**	43—25	1	
63/638022	**OUTER CASING, WHEELBOX TO WHEELBOX (745226)**	43—26	1	
C.5450	**OUTER CASING, WHEELBOX EXTENSION (740746)**	43—27	1	
307819	**ARM FOR WINDSCREEN WIPER (54711557)**	43—28	2	**R.H. DRIVE**
307821	**ARM FOR WINDSCREEN WIPER (54711558)**		2	**L.H. DRIVE**

Part No.	Description	Plate No.	No. per Unit	Remarks
83/638001	**BLADE FOR WINDSCREEN WIPER ARMS (737897)**	43—29	2	
51/638009	**GROMMET FOR OUTER CASING (736472)**		1	
92/635040	**BRACKET MOUNTING WINDSCREEN WIPER MOTOR**		1	
422544/10	**Bolt,** securing Bracket to Dash		4	
422543/2	**Nut,** on Bolt		4	
423199/02	**Washer,** Plain, on Bolt		4	
422508/10	**Washer,** Shakeproof, under Nut		4	
136153	**HORN (LOW NOTE) (69046F-WT618)**	43—30	1	
136154	**HORN (HIGH NOTE) (69047F-WT618)**	43—30	1	
8485	**Diaphragm** (Low Note) (702836)		1	
8486	**Diaphragm** (High Note) (702851)		1	
8484	**Contact Set** (702687)		1	
11104/06	**Bolt,** securing Horns		4	
13104	**Nut,** on Bolt		4	
430241/04	**Washer,** Spring, under Nut		4	
136364	**INSTRUMENT PANEL HARNESS (54945584)**		1	**R.H. DRIVE**
136492	**INSTRUMENT PANEL HARNESS (54945581)**		1	**L.H. DRIVE**

ELECTRICAL EQUIPMENT

Part No.	Description	Plate No.	No. per Unit	Remarks
136363	**BODY HARNESS (54945583)**		1	
136362	**FORWARD HARNESS (54945582)**		1	**R.H. DRIVE**
136491	**FORWARD HARNESS**		1	**L.H. DRIVE**
136361	**BOOT HARNESS (54945581)**		1	
432049	**OIL PRESSURE INDICATOR SWITCH (7954117)**	43—31	1	**Alternative to Switch 432133**
432133	**OIL PRESSURE INDICATOR SWITCH (P.S.5307/07)**	43—31	1	**Alternative to Switch 432049**
	ELECTRICAL CABLES			
308516	**Cable,** for Petrol Gauge and Water Temperature Gauge (54945585)		3	
308517	**Cable,** for Speedometer and Rev. Counter Illumination (54945586)		1	
308518	**Cable,** for Clock (54945880)		1	
427605	**Cable,** for Boot Light (862850)		1	
431047	**Cable,** from R.H. Top Centre Pillar to L.H. Centre Pillar Switch (54941222)		2	
431041	**Cable,** from R.H. Top Centre Pillar to R.H. Door Switch (54941216)		2	
431045	**Cable,** from R.H. Front Switch to Forward Harness (54941220)		1	
431126	**Cable,** from R.H. Flasher Lamp (54941671)		1	
431125	**Cable,** from L.H. Flasher Lamp (54941672)		1	
307793	**Cable,** to Horn (54941670)		1	
307742	**Cable,** 2-way, for Interior Light Switches (54941225)		1	
426846	**Cable,** for Long Range Driving Lamp (R.H.) (862276)		1	
426845	**Cable,** for Fog Lamp (L.H.) (882275)		1	
431044	**Cable, Earth,** for Interior Light Switch (54941219)		1	

Part No.	Description	Plate No.	No. per Unit	Remarks
	GROMMETS			
51/638009	**Grommet,** for Windscreen Casing, External (736472)		1	
431599	**Grommet,** for Sidelamp Wiring in Wing (M2644)		2	
432483	**Grommet,** for Horn (690939)		2	
C.2850	**Grommet,** for Inter Gear Lock Control, Throttle Control, Mixture Control, Petrol Reserve Control (859341)		4	
C.2850	**Grommet,** for Courtesy Light (2), Door Light (2), Heater and Demister (2), Tail Lamp (2), Bonnet Release Catch, Boot Lamp Cable (859341)		10	
C.2706	**Grommet,** for Windscreen Washer Tube (3), Fog and Long Range Driving Lamp Cables in Front Apron (2) (859059)		5	
C.2707	**Grommet,** for Head and Side Lamp Cables in Sideshields (859060)		2	
423179/4	**Grommet,** for Harness in Dash (2), Body Harness (859061)		3	
405402	**Grommet,** for Rear of Body (L5433-2)		1	
	CABLE SLEEVES			
425156	**Cable Sleeves,** for Headlamp Cables (822094)		2	
427860	**Cable Sleeves,** for Boot Harness (863080)		1	
	CLIPS			
428753	**Clip,** securing Dynamo Cable to Battery Support (187052)		1	**R.H. DRIVE**
428753	**Clips,** securing Dynamo Cable to Valance (187052)		1	**L.H. DRIVE**
424770	**Clips,** securing Battery Positive Cable, Horn, and Manette Cable to Steering Box (850276)		2	
404694	**Clips,** securing Main Harness to Front Side and Rear of Dash (187051)		6	
411480	**Clips,** securing Headlamp Cable and Boot Harness		2	
408619	**Clips,** securing Solenoid Cable (2), Boot Lamp Cable (187045)		4	
426689	**Clips,** Earthing leads to Sideshields (860015)		4	
427338	**Clips,** securing Flasher Cable to Control Box (187042)		1	
406392	**Clips,** securing Temperature Transmitter Cable to Petrol Pipe		2	
408618	**Clips,** securing Windscreen Wiper and Blower Unit Cable (3), Boot Lid Hinge (187045)		4	
425109	**Clips,** securing Horn Lead to Front Cross Member (850881)		3	
424759	**Clips,** for Boot Floor (87004)		2	
92/637542	**Clips,** for Sideshields (Clip on type) (SC.01888/17/00)		6	

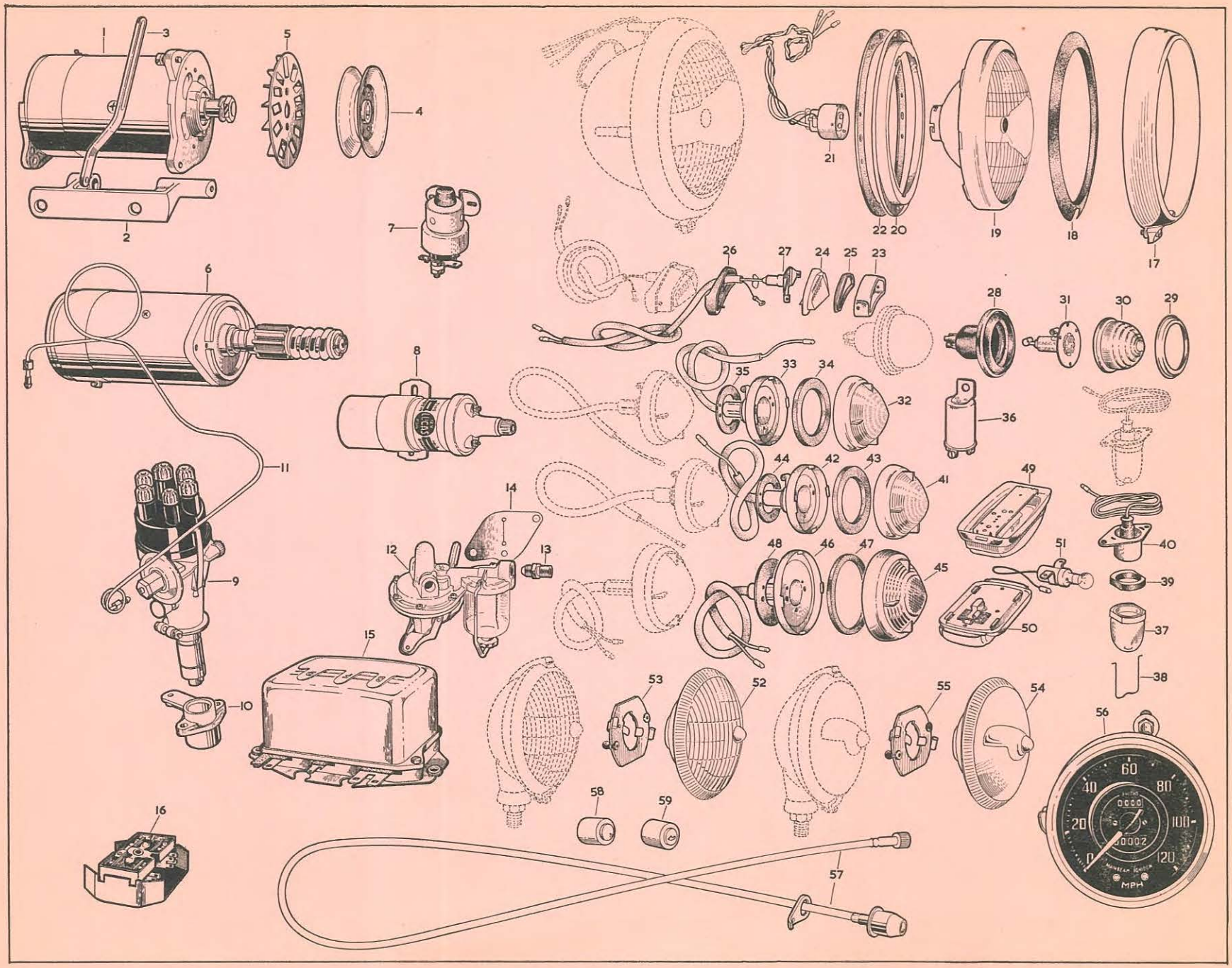
1
2
3
4
5
6
7
8
9
10
11
12
13
14
15
16
17
18
19
20
21
22
23
24
25
26
27
28
29
30
31
32
33
34
35
36
37
38
39
40
41
42
43
44
45
46
47
48
49
50
51
52
53
54
55
56
57
58
59
0
20
40
60
80
100
120
MPH

PLATE 42

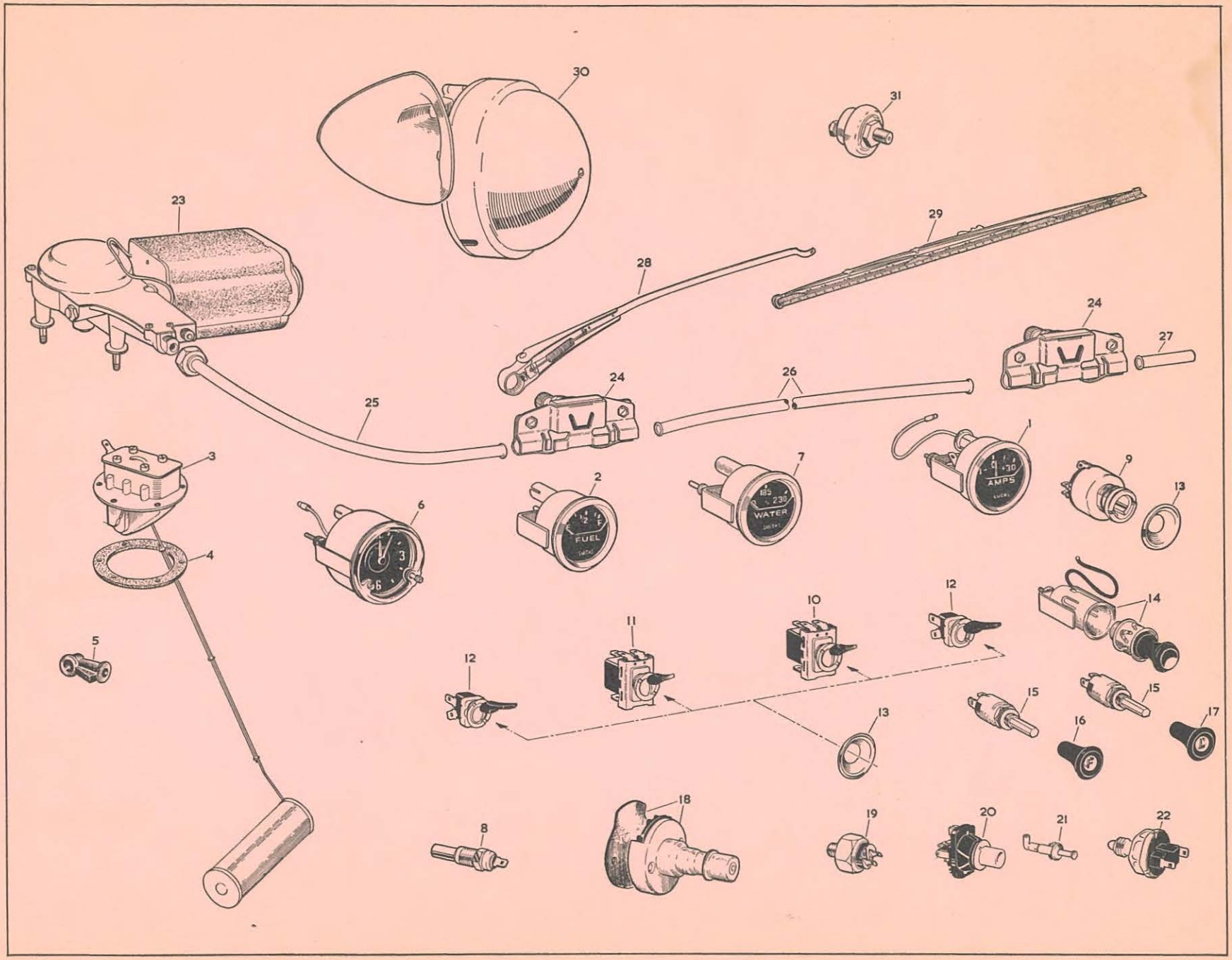
30
31
23
29
28
24
27
24
26
25
1
AMPS
3
2
FUEL
7
WATER
9
13
6
4
12
10
14
11
12
5
15
15
13
16
17
18
8
19
20
21
22

PLATE 43

ELECTRICAL (HYDROSTEER)

Part No.	Description	Plate No.	No. per Unit	Remarks
C.15254	**DYNAMO (LUCAS 22528/D.C45.PV56)**		1	
8447	**Armature** (54211386)		1	
7906	**Brushes** (54210090)		1 set	
7907	**Spring,** for Brush Tension (54210091)		1 set	
8446	**Bracket,** Commutator End (54210084)		1	
2754	**Bearing,** Commutator End (189237)		1	
7510	**Bracket,** Driving End (54210022)		1	
7511	**Bearing,** Driving End (189314)		1	
7512	**Bearing Plate** (239888)		1	
6506	**Dished Washer** (238564)		1	
7513	**Corrugated Washer** (239892)		1	
7514	**Retainer Bearing Ring** (238824)		1	
7515	**Bearing Collar** (239898)		1	
7516	**Distance Collar** (239594)		1	
7517	**Field Coil** (207013)		1 set	
2749	**Nut,** for Commutator Shaft (180620)		1	
6508	**Washer,** under Nut (185187)		1	
8445	**Terminal** (54210020)		1	
6511	**Insulating Tube,** for Terminal (875692)		1	
7518	**Bolt,** through fixing (207008)		2	
432869	**Mounting Pin,** securing Dynamo to Bracket		1	
422500/02	**Washer,** Plain, on Pin		1	
C.14936	**COUPLING ASSEMBLY, CONNECTING DYNAMO ARMATURE SHAFT WITH POWER STEERING PUMP (54211204)**		1	
8285	**Coupling only** (54210027)		1	
C.13844	**Driving Dog** (239889)		2	
C.14475	**Stud,** in Rear Face of Dynamo for fixing of Power Steering Pump		3	
UCN.131/L	**Nut,** on Studs		3	
C.16816	**Washer,** Spring, under Nuts		3	

NOTE: The above items are required for cars equipped with Hydrosteer. For all other Electrical items, refer to the appropriate pages in previous "Electrical" sections.

HEATER AND DEMISTER

Part No.	Description	Plate No.	No. per Unit	Remarks
134602	**WATER INLET PIPE FROM THERMOSTAT BODY**	44—1	1	
134603	**WATER OUTLET PIPE TO WATER PUMP**	44—2	1	
422260	**Nozzle,** for Water Pipe Connections to Thermostat Body, and Water Pump	44—3	2	
422506/16	**Washer** (C.A.), on Nozzle	44—4	2	
422261/1/2	**Clamp,** positioning Water Pipes (Two Pieces)	44—5	3	
423361	**Screw,** securing Clamp		3	
422259	**Hose,** connecting Inlet and Outlet Pipes (CHS.93/35)	44—6	4	
422368	**Clip,** securing Hose	44—7	8	
134215	**HEATER UNIT ASSEMBLY (FHF.3503)**	44—8	1	
425506	**Seat Washer,** for Heater Unit Base (CHS.2100)	44—9	1	
304296	**Deflector Assembly,** for Heater Unit	44—10	2	
12104/10	**Screw,** Set, securing Heater Unit to Dash		1	
12104/05	**Screw,** Set, securing Heater Unit to Dash		3	
422500/01	**Washer,** Plain, on Setscrews		4	
422508/18	**Washer,** Shakeproof, on Setscrews		4	
308284	**BLOWER UNIT ASSEMBLY (1-011-20-7102-9)**	44—11	1	
12104/10	**Screw,** Set, securing Blower Unit to Dash		1	
12104/05	**Screw,** Set, securing Blower Unit to Dash		3	
422500/01	**Washer,** Plain, on Setscrews		4	
422508/18	**Washer,** Shakeproof, on Setscrews		4	
425627/02	**HOSE, CONNECTING BLOWER UNIT TO HEATER UNIT**	44—12	1	
431772	**HOSE, CONNECTING BLOWER UNIT TO PLENUM CHAMBER**	44—13	1	
308285	**ROTARY CONTROL FOR DEMISTER (1-011-20-7102A)**	44—14	1	

Part No.	Description	Plate No.	No. per Unit	Remarks
308286	**ROTARY CONTROL FOR TEMPERATURE (1-011-20-7102B)**	44—15	1	
431736	**CABLES FOR DEMISTER AND TEMPERATURE CONTROLS (8114/120)**	44—16	2	
431738	**OPERATING KNOB FOR HEATER CONTROL (DEMISTER)**	44—17	1	
431739	**OPERATING KNOB FOR HEATER CONTROL (TEMPERATURE)**	44—18	1	
431740	**INDICATOR STUD FOR HEATER CONTROLS**		2	
307802	**SWITCH FOR HEATER UNIT (P.S.7/3 31557)**	44—19	1	**DF.316/7 ONLY**
431750	**Knob 'H'** on Blower Switch	44—20	1	
308817	**SWITCH FOR HEATER (34341-65SA)**		1	**DF.318/9 ONLY**
431889	**Designation Plate,** 'Heater' for Heater Switch		1	
63/635312	**R.H. HOSE FOR DEMISTER**	44—21	1	

HEATER AND DEMISTER

Part No.	Description	Plate No.	No. per Unit	Remarks
63/635311	**L.H. HOSE FOR DEMISTER**	44—22	1	
423176/18	**Clip,** securing Demister Hose	44—23	4	
92/645185	**R.H. DUCT FOR DEMISTER**	44—24	1	
92/645187	**L.H. DUCT FOR DEMISTER**	44—25	1	
63/637268	**Screw,** Set, securing Ducts to Body		4	

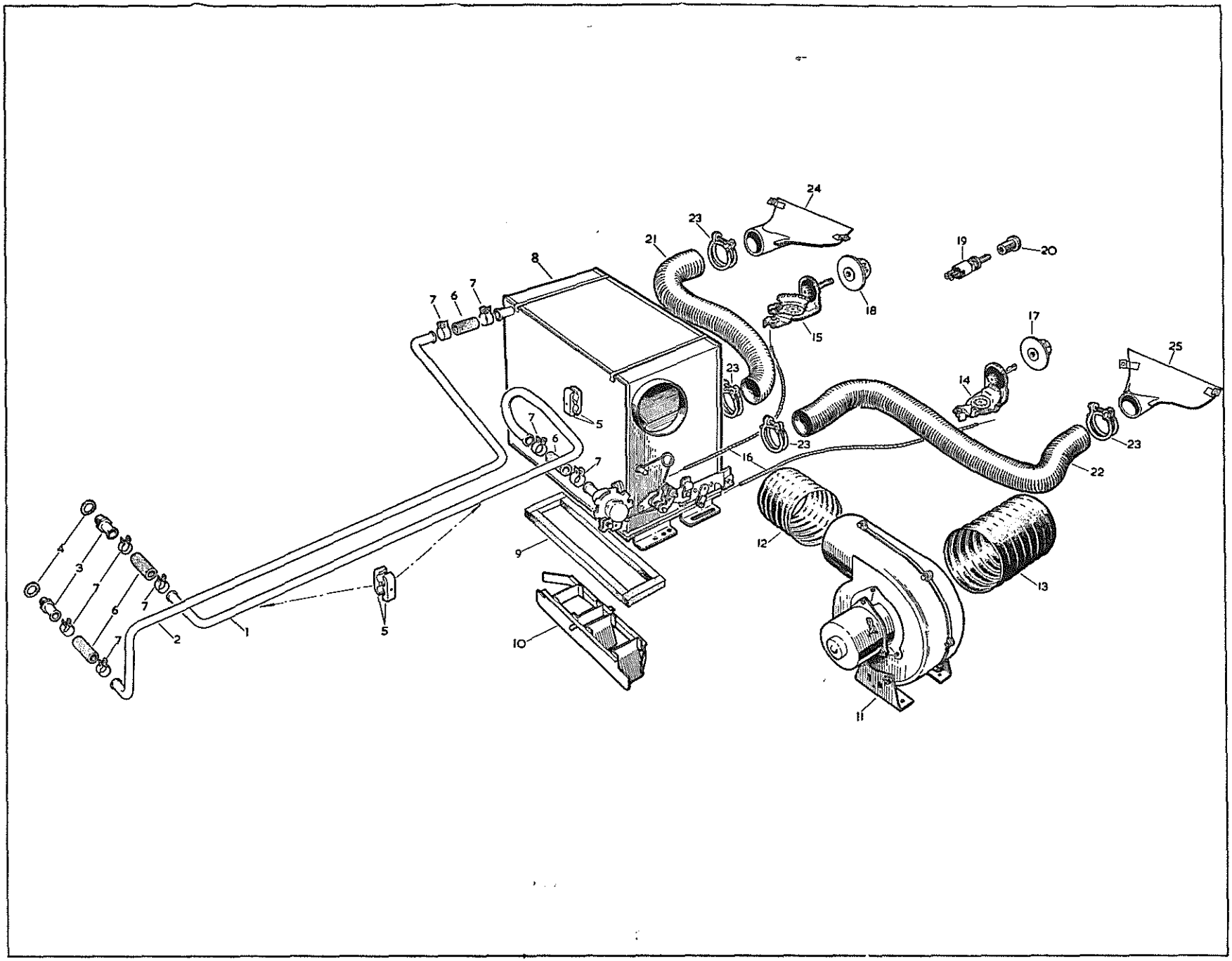

PLATE 44

WINDSCREEN WASHER

Part No.	Description	Plate No.	No. per Unit	Remarks
136025	**WINDSCREEN WASHER ASSEMBLY (COMPRISING WASHING UNIT, CONTROL, JETS, TEE PIECE AND HOSES)**		1	
C.10127/1	**JAR, PUMP AND BRACKET ASSEMBLY (800051)**	45—1	1	
C.10127/2	**Jar only** (Glass)		1	
C.10127/3	**Pump and Cover Assembly**		1	
C.10127/5	**Bracket**		1	
C.10127/6	**Strainer Tube Assembly**		1	
426575	**Mounting Block,** for Jar Assembly		1	
422545/15	**Screw,** securing Bracket to Valance		3	
422543/2	**Nut,** on Screws		3	
422508/08	**Washer,** Shakeproof, under Nuts		3	
C.5473/5	**ADAPTOR ASSEMBLY AT REAR OF INLET MANIFOLD (770750)**	45—2	1	
	HOSE CONNECTIONS		1	
134565/11	**Hose,** from Adaptor to Control (81846 × 38″ long)	45—3	1	
136025/02	**Hose,** from Control to Pump (81846 × 72″ long)	45—4	1	
136025/01	**Hose,** from Pump to Tee Piece (81846 × 64″ long)	45—5	1	
134253/14	**Hose,** from Tee Piece to Jets (PF.15-882018 × 21″ long)	45—6	2	
C.5473/6	**TEE PIECE AT JOINT OF HOSES**	45—7	1	
C.5473/4	**JET ASSEMBLY COMPLETE (800213)**	45—8	2	
C.5495	**Jet Body**		2	
C.5499	**Knurled Button,** for Jet cleaning (800217)		2	
C.5496	**Plastic Washer,** on Button (81635)		2	
C.5497	**Rubber Washer,** between Jets and Scuttle (735853)		2	
134253/06	**Plate Nut,** securing Jets to Scuttle		2	
135732/06	**CONTROL VALVE ASSEMBLY (900255)**	45—9	1	
431893	**Instruction Plate** ("Wash"), for Control Valve	45—10	1	**FITTED TO DF.318/9 ONLY**

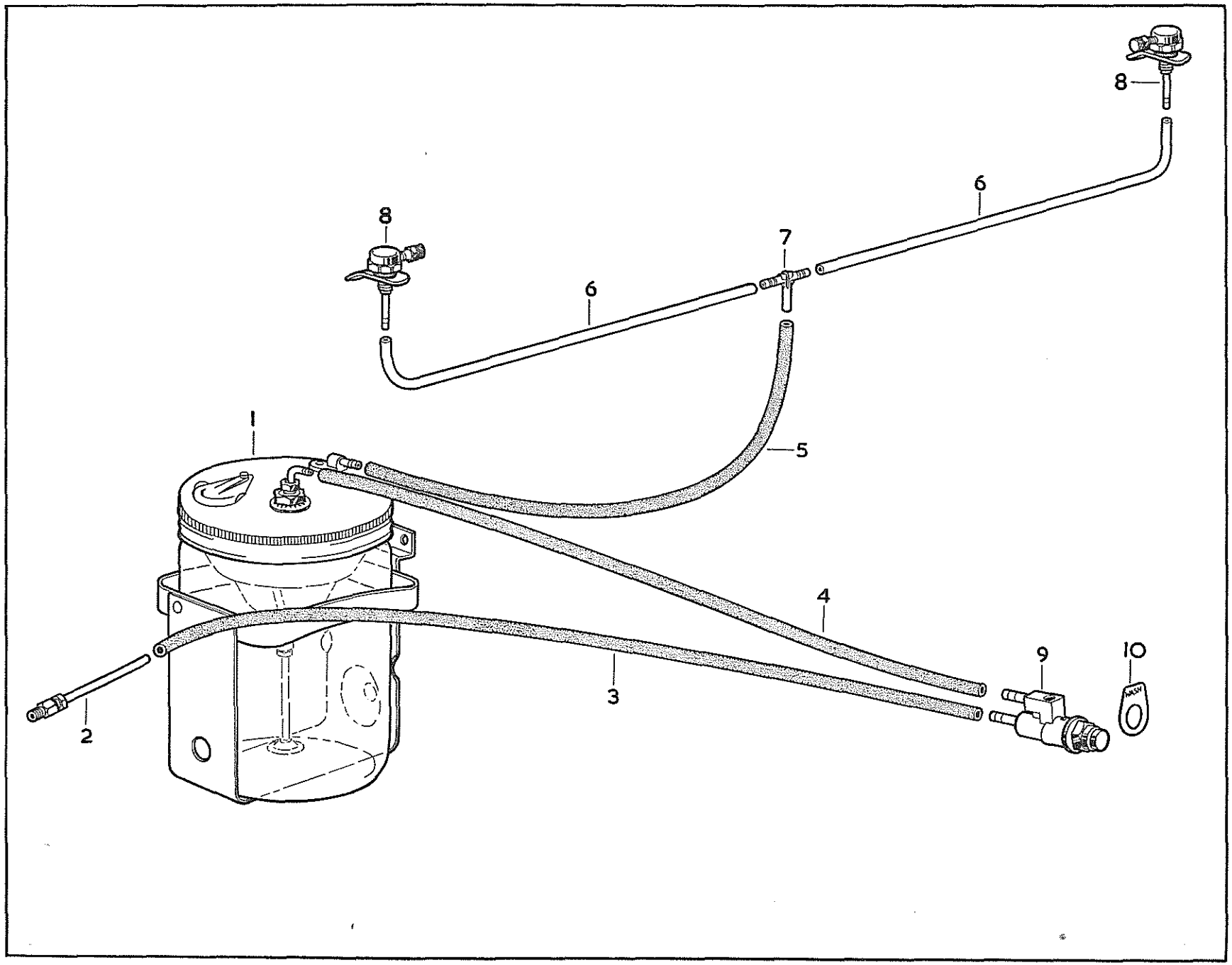

PLATE 45

TOOL KIT

Part No.	Description	Plate No.	No. per Unit	Remarks
424754	**Spanner,** Open Ended, $\frac{5}{16}''$ × $\frac{3}{8}''$ A.F.		1	
424755	**Spanner,** Open Ended, $\frac{7}{16}''$ × $\frac{1}{2}''$ A.F.		1	
303793	**Spanner,** Open Ended, $\frac{9}{16}''$ × $\frac{11}{16}''$ A.F.		1	
303794	**Spanner,** Open Ended, $\frac{11}{16}''$ × $\frac{13}{16}''$ A.F.		1	
303795	**Spanner,** Open Ended, $\frac{13}{16}''$ × 1″ A.F.		1	
303787	**Box Spanner,** $\frac{1}{2}''$ × $\frac{9}{16}''$ A.F.		1	
303788	**Box Spanner,** $\frac{11}{16}''$ × $\frac{13}{16}''$ A.F.		1	
303785	**Box Spanner,** for Sparking Plugs		1	
303789	**Tommy Bar,** for Box Spanners		1	
264185	**Spanner,** for Hub Caps		1	
418260	**Adjustable Spanner**		1	
301950	**Grease Gun**		1	
418352	**Pressure Gauge,** for Tyres		1	
133588	**Foot Pump**		1	
134311	**Tool Roll**		1	
418259	**Pliers**		1	
308011	**Screwdriver**		1	
426071	**Screwdriver and Point Gauge,** for Distributor		1	
418257	**File,** for Contact Breaker		1	
401058	**Gauge,** for Tappets		1	
303101	**Wheel Brace**		1	
425706	**Hub Cap Remover**		1	
135172	**Lifting Jack**		1	
431050	**Bleeder Tube,** for Brakes		1	
426898	**Extension Assembly,** for Spare Wheel Adjustment		1	
426073	**VALVE SPRING COMPRESSOR ASSEMBLY**		1	**TO SPECIAL ORDER ONLY**
425022	**VALVE SPRING COMPRESSOR LEVER ASSEMBLY**		1	
11107/38	**BOLT, $\frac{7}{16}''$ × $4\frac{3}{4}''$ FOR USE WHEN CYLINDER HEAD IS REMOVED**		1	
307301	**STARTING HANDLE**		1	

Printed in England by W. W. Curtis Ltd., Cheylesmore Press, Coventry.